Chipsmall Limited consists of a professional team with an average of over 10 year of expertise in the distribution of electronic components. Based in Hongkong, we have already established firm and mutual-benefit business relationships with customers from,Europe,America and south Asia,supplying obsolete and hard-to-find components to meet their specific needs.

With the principle of “Quality Parts,Customers Priority,Honest Operation,and Considerate Service”,our business mainly focus on the distribution of electronic components. Line cards we deal with include Microchip,ALPS,ROHM,Xilinx,Pulse,ON,Everlight and Freescale. Main products comprise IC,Modules,Potentiometer,IC Socket,Relay,Connector.Our parts cover such applications as commercial,industrial, and automotives areas.

We are looking forward to setting up business relationship with you and hope to provide you with the best service and solution. Let us make a better world for our industry!

Contact us

Tel: +86-755-8981 8866 Fax: +86-755-8427 6832
Email & Skype: info@chipsmall.com Web: www.chipsmall.com
Address: A1208, Overseas Decoration Building, #122 Zhenhua RD., Futian, Shenzhen, China

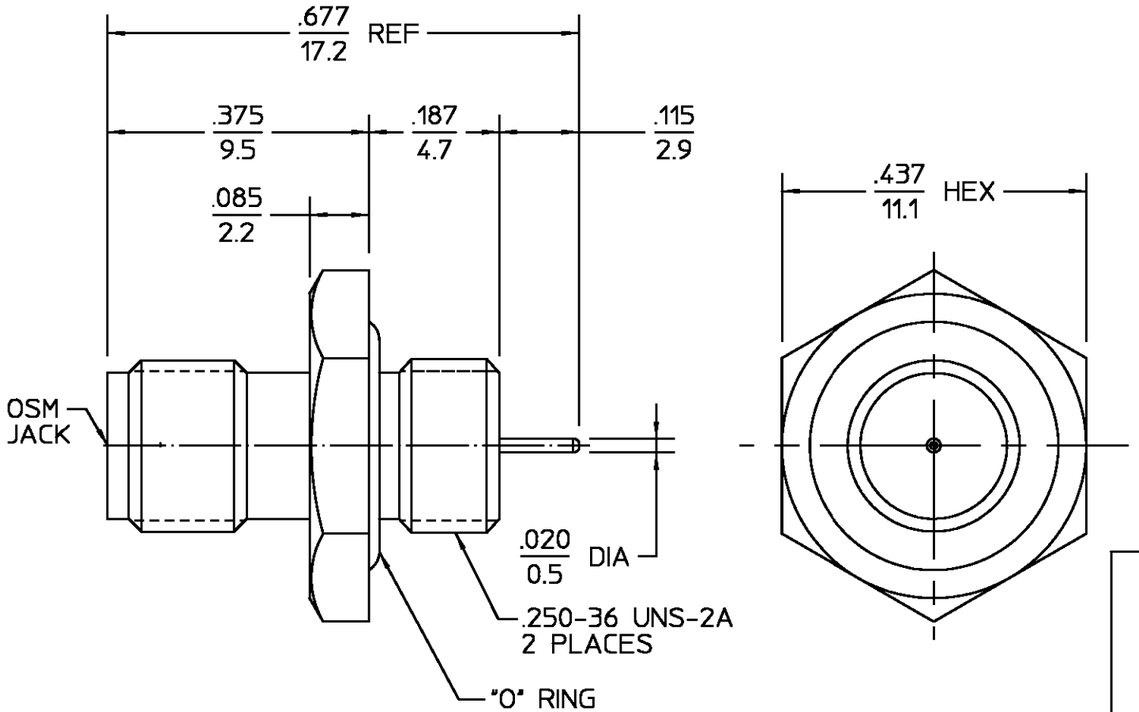

REVISIONS			
REV	DESCRIPTION	DATE	APPROVED
A1	REVISED PER ECO-11-005294	13APR11	HMR

ELECTRICAL	MECHANICAL	ENVIRONMENTAL
Nominal Impedance (Ohms) 50	Interface Dimensions MIL-STD-348A,	Temperature Rating -65°C to +165°C
Frequency Range (GHz) DC to 18.0	Fig. 310.2	Vibration MIL-STD-202, Method
Volt Rating (VRMS MAX)	Recommended Mating	204, Condition D.
@ Sea Level 33500	Torque 7 - 10 in-lbs	Shock MIL-STD-202, Method 213,
VSWR 1.05 + .01 f(GHz)	Mating Characteristics:	Condition I.
Insertion Loss (dB MAX) $.04\sqrt{f(GHz)}$	Insertion (MAX lbs) 3.0	Thermal Shock MIL-STD-202,
RF Leakage (dB MIN) [-70 - f(GHz)]	Withdrawal (MIN oz) 1.0	Method 107, Condition B,
Corona, 70,000 Ft (VRMS MIN) 250	Force to Engage and	
Dielectric Withstanding Voltage	Disengage (in-lbs MAX) 2.0	Moisture Resistance MIL-STD-202,
(VRMS MIN) @ Sea Level 1,000	Center Contact Captivation	Method 106
Contact Resistance (Milliohms MAX)	Axial (lbs) 6.0	Corrosion - MIL-STD-202, Method
Center Contact 10.0	Radial (in-oz) N/A	101, Condition B, 5% salt spray
Outer Contact 2.0	Cable Retention	
Cable to Housing N/A	Axial Force (lbs) N/A	.XXX = in
RF High Potential @ Sea Level	Torque (in-oz) N/A	XX.X = mm (REF)
(VRMS MIN @ 5 MHz) 670	Weight (Grams) TBD	
I.R.(Megohms MIN) 5,000		

COMPONENT	MATERIAL	FINISH
HOUSING	STAINLESS STEEL PER ASTM-A484 AND ASTM-A582, TYPE 303	GOLD PLATE PER MIL-G-45204
DIELECTRIC	PTFE FLUOROCARBON PER ASTM-D-1457	N/A
CENTER CONTACT	BERYLLIUM COPPER PER ASTM B 196, ALLOY C17300, CONDITION H	GOLD PLATE PER MIL-G-45204
CONTACT EXT. BUSHING	IRON-NICKEL-COBALT ALLOY PER MIL-I-23011 CLASS 1 (KOVAR)	GOLD PLATE PER MIL-G-45204
"O" - RING	SILICONE RUBBER PER ZZ-R-765	N/A
HERMETIC SEAL	GLASS BEAD	N/A

UNLESS OTHERWISE SPECIFIED DIMENSIONS ARE IN INCHES
TOLERANCE ON
FRAC. ± 1/64 DEC. ±.005 ANGLES ± 1°

DRAWN BY BW	DATE 7/3/68	
CHECKED BY PRB	3/14/69	
APP'D BY	3/14/69	

TE Connectivity

These drawings and specifications are the property of AMP Incorporated and shall not be reproduced or copied or used in whole or in part as the basis for the manufacture or sale of item(s) without written permission.

USE ASS'Y PROCEDURE

NO. A.P. N/A

TITLE "OS'M BULKHEAD JACK HERMETICALLY SEALED .020 DIA PIN

SIZE	CODE IDENT NO.		REV
B	26805	1053137-1	A1
SCALE 5 : 1			SHEET 1 OF 1