Chipsmall Limited consists of a professional team with an average of over 10 year of expertise in the distribution of electronic components. Based in Hongkong, we have already established firm and mutual-benefit business relationships with customers from,Europe,America and south Asia,supplying obsolete and hard-to-find components to meet their specific needs.

With the principle of “Quality Parts,Customers Priority,Honest Operation,and Considerate Service”,our business mainly focus on the distribution of electronic components. Line cards we deal with include Microchip,ALPS,ROHM,Xilinx,Pulse,ON,Everlight and Freescale. Main products comprise IC,Modules,Potentiometer,IC Socket,Relay,Connector.Our parts cover such applications as commercial,industrial, and automotives areas.

We are looking forward to setting up business relationship with you and hope to provide you with the best service and solution. Let us make a better world for our industry!

Contact us

Tel: +86-755-8981 8866 Fax: +86-755-8427 6832
Email & Skype: info@chipsmall.com Web: www.chipsmall.com
Address: A1208, Overseas Decoration Building, #122 Zhenhua RD., Futian, Shenzhen, China

THIS COPY IS PROVIDED ON A RESTRICTED BASIS AND IS NOT TO BE USED IN ANY WAY DETRIMENTAL TO THE INTERESTS OF PANDUIT CORP.

SYSTEM CABLE

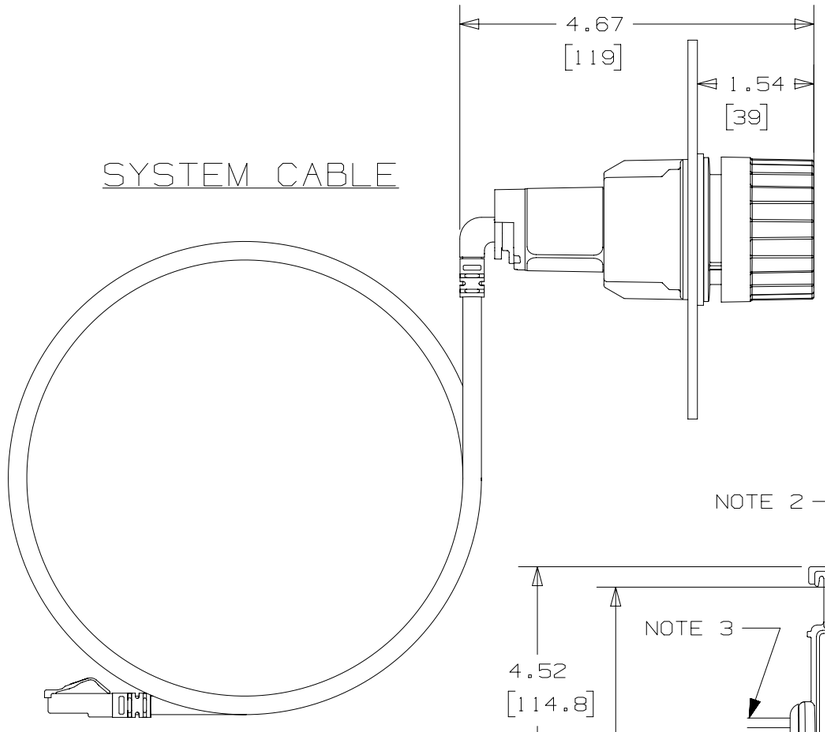

INDICATOR MODULE

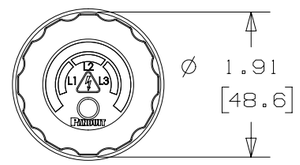

30MM PANEL KNOCKOUT

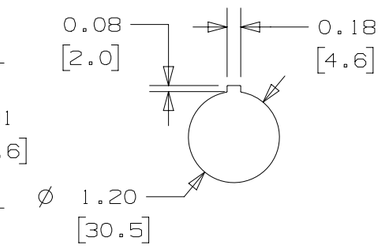

ISOLATION MODULE

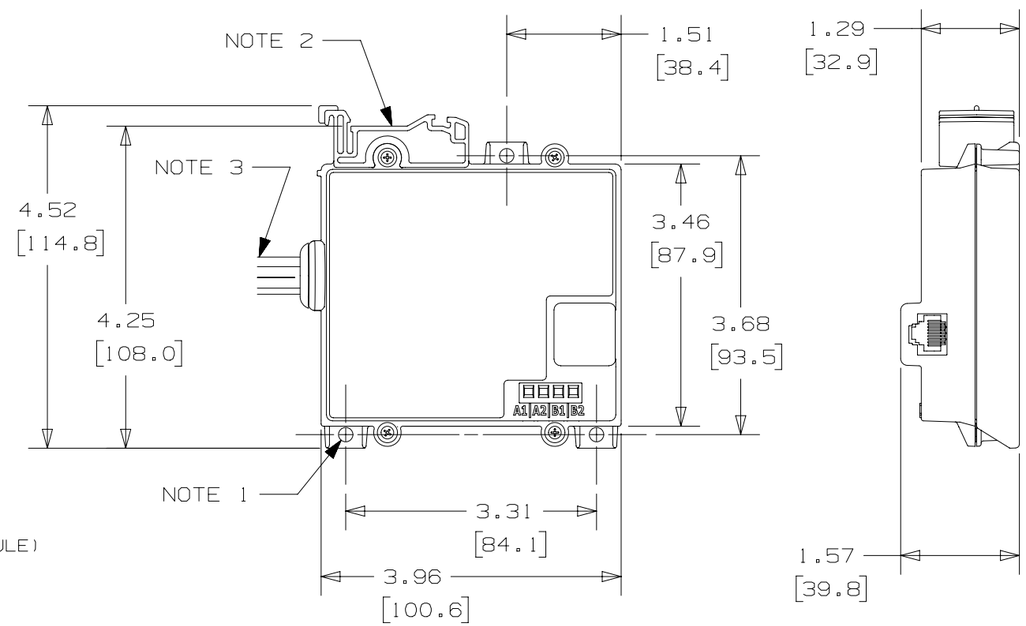

INSTRUCTION LABEL

(TO BE LOCATED NEAR INDICATOR MODULE)

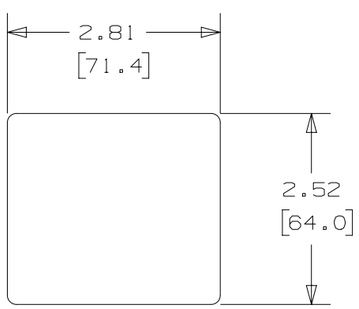

NOTES, UNLESS OTHERWISE SPECIFIED

1. Mount for #8 Pan Head Screw. 3 Places.
2. DIN Rail Mounting Feature
3. Lead Wires. QTY 8 - 14 AWG (2.08mm²)

READ PRODUCT INSTRUCTIONS BEFORE USING

PANDUIT PART NUMBER:

VS-AVT-C08-L10 (North America) (8FT SYSTEM CABLE, 10 FT LEADS)
VS-AVT-C02-L03 (North America) (2 FT SYSTEM CABLE, 3 FT LEADS)
VS-AVT-C02-L03A (Asia Pacific) (2 FT SYSTEM CABLE, 3 FT LEADS)
VS-AVT-C08-L10A (Asia Pacific) (8FT SYSTEM CABLE, 10 FT LEADS)

GENERAL SPECIFICATIONS

Electrical System:	For use in 1, 2, or 3-phase AC systems
Voltage Detection Range:	Up to 600V AC (50/60Hz), 600V DC
Absence of Voltage Threshold:	3V
Overvoltage Category:	III (600V)
Degree of Protection:	NEMA 1, 12, 4, 4X, 13 / IP66, IP67*

Environmental

Operating Temperature:	0°C to +60°C (32°F to 140°F)
Storage Temperature:	-45°C to +85°C (-49°F to +185°F)
Humidity:	5 to 95% non-condensing
Pollution Degree:	3

Battery

Voltage:	Industrial 3.6V Lithium AA
Serviceability:	User Replaceable.

Weight

Units with 2 ft system cables and 3 ft leads weigh 1202 gms / 2.65 lbs
Units with 8 ft system cables and 10 ft leads weigh 1792 gms / 3.95 lbs

*Degree of protection specified is related to Indicator Module only

REV	DATE	BY	CHK	APR	DESCRIPTION	ECN
5	5/9/18	DFA	CLW	MSAD	ADDED RoAP P/Ns TO NOTES; MODIFIED WORDING; REMOVED C02-L10 UNIT	GAECN05271
4	10/27/17	DFA	MSAD	JW	CHANGED SYSTEM CABLE LENGTH TO 2 FT FOR VS-AVT-C02-L03	GAECN05169
3	10/19/17	DFA	MSAD	JW	ADDED VS-AVT-C02-L03 TO NOTES	GAECN05166
2	6/7/17	MROB	MSAD	JW	ADDED AUXILIARY INSTRUCTION LABEL	GAECN04170

TITLE: VERISAFE ABSENCE OF VOLTAGE TESTER

CUSTOMER DRAWING

ITEM REVISION NAME: 141216AS/10

DATASET FILE NAME: 141216AS_DC/05

UNLESS OTHERWISE SPECIFIED, DIMENSIONAL TOLERANCES ARE: IN [mm]
.x ± .1 [2.54] .xxx ± .005 [.127]
.xx ± .01 [.25] ANGLES ± 5°
THIRD ANGLE PROJECTION

MATERIAL: N/A

DRAWING NUMBER: 141216AS_DC

DRAWN BY	DATE	CHK	SCALE	SIZE
MROB	4/3/17	MSAD	NTS	B

SHT 1 OF 1

D10100DB/17