Chipsmall Limited consists of a professional team with an average of over 10 year of expertise in the distribution of electronic components. Based in Hongkong, we have already established firm and mutual-benefit business relationships with customers from,Europe,America and south Asia,supplying obsolete and hard-to-find components to meet their specific needs.

With the principle of “Quality Parts,Customers Priority,Honest Operation,and Considerate Service”,our business mainly focus on the distribution of electronic components. Line cards we deal with include Microchip,ALPS,ROHM,Xilinx,Pulse,ON,Everlight and Freescale. Main products comprise IC,Modules,Potentiometer,IC Socket,Relay,Connector.Our parts cover such applications as commercial,industrial, and automotives areas.

We are looking forward to setting up business relationship with you and hope to provide you with the best service and solution. Let us make a better world for our industry!

Contact us

Tel: +86-755-8981 8866 Fax: +86-755-8427 6832
Email & Skype: info@chipsmall.com Web: www.chipsmall.com
Address: A1208, Overseas Decoration Building, #122 Zhenhua RD., Futian, Shenzhen, China

THIS COPY IS PROVIDED ON A RESTRICTED BASIS AND IS NOT TO BE USED IN ANY WAY DETRIMENTAL TO THE INTERESTS OF PANDUIT CORP.

PANDUIT PART NUMBER	QUANTITY
RGTS1032-C	100

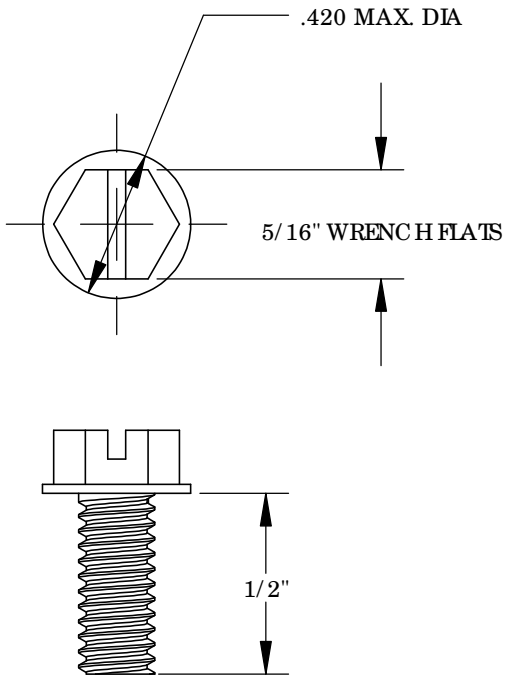

NOTES:

1. PAINT PIERCING THREAD DESIGN TO PROVIDE GROUNDING CONNECTION TO THE RACK.
2. # 10-32 SLOTTED HEX HEAD THREAD FORMING SCREW.
3. MATERIAL: CLEAR TRIVALENT ZINC PLATED LOW CARBON STEEL
4. PANDUIT PART NUMBER: RGTS1032-C
5. ALL COMPONENTS THAT MAKE UP THIS PART ARE RoHS COMPLIANT.

C41625_00

REV	DATE	BY	CHK	DESCRIPTION	ECN	PM	APP
00	12/05	JHNU	RGB	DRAWING RELEASED	PC00232		

PANDUIT CORP. TINLEY PARK, ILLINOIS

10-32 SLOTTED HEX HEAD THREAD FORMING SCREW (RGTS1032) CUSTOMER DRAWING

DRAWN BY	CHK'D	SCALE	DRAWING NO / CAD FILE
JHNU		NONE	C41625