Chipsmall Limited consists of a professional team with an average of over 10 year of expertise in the distribution of electronic components. Based in Hongkong, we have already established firm and mutual-benefit business relationships with customers from,Europe,America and south Asia,supplying obsolete and hard-to-find components to meet their specific needs.

With the principle of “Quality Parts,Customers Priority,Honest Operation,and Considerate Service”,our business mainly focus on the distribution of electronic components. Line cards we deal with include Microchip,ALPS,ROHM,Xilinx,Pulse,ON,Everlight and Freescale. Main products comprise IC,Modules,Potentiometer,IC Socket,Relay,Connector.Our parts cover such applications as commercial,industrial, and automotives areas.

We are looking forward to setting up business relationship with you and hope to provide you with the best service and solution. Let us make a better world for our industry!

Contact us

Tel: +86-755-8981 8866 Fax: +86-755-8427 6832
Email & Skype: info@chipsmall.com Web: www.chipsmall.com
Address: A1208, Overseas Decoration Building, #122 Zhenhua RD., Futian, Shenzhen, China

THIS DRAWING IS UNPUBLISHED. RELEASED FOR PUBLICATION – ,– .
© COPYRIGHT – By – ALL RIGHTS RESERVED.

LOC	DIST
H	—

REVISIONS

P	LTR	DESCRIPTION	DATE	DWN	APVD
	A	INITIAL RELEASE	16NOV2013	YC	BvH
	A1	ECR–14–011671	16AUG2014	GSK	BvH
	A2	ECR–15–008219	01JUN2015	GSK	BvH

NOTES:
Tolerances cable lengths:

0m to 0.5m	+30mm
0.5m to 1.0m	+50mm
1.0m to 3.0m	+100mm
< 3.0m	+1.5%

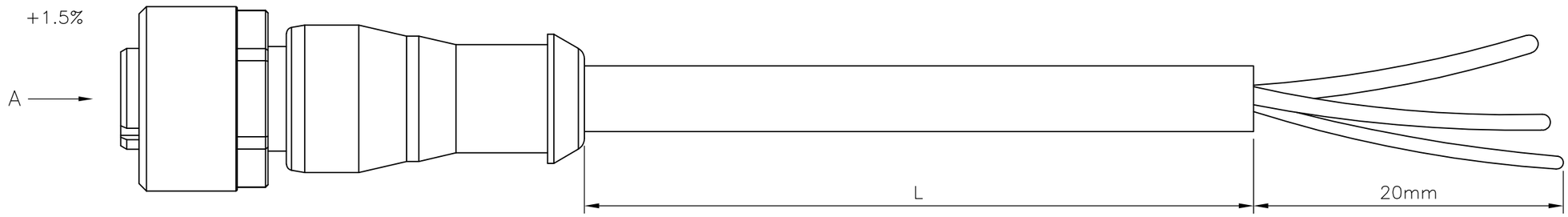

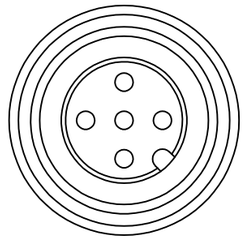

VIEW 'A'

Contact Layout
Female

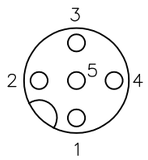

Schematic diagram

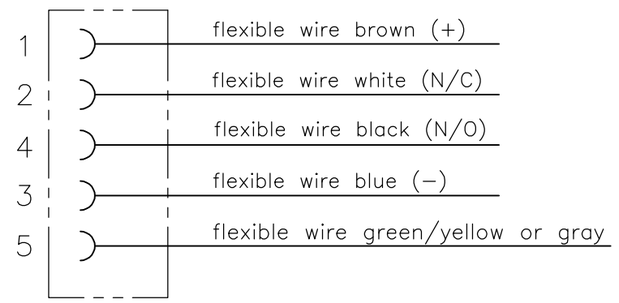

TECHNICAL DATA	
Operating voltage	max. 125 V AC/DC
Operating current per contact	max. 4 A
Locking of ports	Screw thread M12 x 1 mm (recommended torque 0.6 Nm) self–securing
Protection	IP65 and IP67 when plugged and screwed down (EN 60529)

PUR CABLE	
No./diameter of wires	5 x 0.34 mm²
Wire isolation	PP (br, wh, bl, bk, gnye)
C–track properties	yes
Jacket	PUR (UL/CSA)
Outer diameter	approx. 5.0 mm
Bend radius (moving)	10 x outer diameter
Temperature range (fixed)	–50...+80 °C
Temperature range (mobile)	–25...+80 °C

PVC CABLE	
No./diameter of wires	5 x 0.34 mm²
Wire isolation	PVC (br, wh, bl, bk, gnye)
C–track properties	
Jacket	PVC (UL/CSA)
Outer diameter	approx. 5.2 mm
Bend radius (moving)	10 x outer diameter
Temperature range (fixed)	–30...+80 °C
Temperature range (mobile)	–5...+80 °C

LENGTH"L"	MATERIAL	JACKET COLOR	TE PN	DESCRIPTION	ITEM
5 pos 30000mm	PVC	Black	1–2273035–6	5x22AWG PVC 30.0m	10
5 pos 20000mm	PVC	Black	1–2273035–5	5x22AWG PVC 20.0m	9
5 pos 10000mm	PVC	Black	1–2273035–4	5x22AWG PVC 10.0m	8
5 pos 5000mm	PVC	Black	1–2273035–3	5x22AWG PVC 5.0m	7
5 pos 3000mm	PVC	Black	1–2273035–2	5x22AWG PVC 3.0m	6
5 pos 1500mm	PVC	Black	1–2273035–1	5x22AWG PVC 1.5m	5
5 pos 10000mm	PUR	Black	2273035–4	5x22AWG PUR 10.0m	4
5 pos 5000mm	PUR	Black	2273035–3	5x22AWG PUR 5.0m	3
5 pos 3000mm	PUR	Black	2273035–2	5x22AWG PUR 3.0m	2
5 pos 1500mm	PUR	Black	2273035–1	5x22AWG PUR 1.5m	1

THIS DRAWING IS A CONTROLLED DOCUMENT.

DIMENSIONS: mm

TOLERANCES UNLESS OTHERWISE SPECIFIED:
0 PLC ± –
1 PLC ± –
2 PLC ± –
3 PLC ± –
4 PLC ± –
ANGLES ± –

MATERIAL –
FINISH –

DWN YATHISH.C 16NOV2013
CHK B.VELDHOVEN 16NOV2013
APVD A.VAN ZANDVOORT 16NOV2013
PRODUCT SPEC 108–19483
APPLICATION SPEC 114–32127
WEIGHT –

TE Connectivity

NAME M12 X 1.0 STRAIGHT SOCKET PIGT A
–

SIZE	CAGE CODE	DRAWING NO	RESTRICTED TO
A3	00779	C–2273035	—

CUSTOMER DRAWING | SCALE NTS | SHEET 1 OF 1 | REV A2