Chipsmall Limited consists of a professional team with an average of over 10 year of expertise in the distribution of electronic components. Based in Hongkong, we have already established firm and mutual-benefit business relationships with customers from,Europe,America and south Asia,supplying obsolete and hard-to-find components to meet their specific needs.

With the principle of “Quality Parts,Customers Priority,Honest Operation,and Considerate Service”,our business mainly focus on the distribution of electronic components. Line cards we deal with include Microchip,ALPS,ROHM,Xilinx,Pulse,ON,Everlight and Freescale. Main products comprise IC,Modules,Potentiometer,IC Socket,Relay,Connector.Our parts cover such applications as commercial,industrial, and automotives areas.

We are looking forward to setting up business relationship with you and hope to provide you with the best service and solution. Let us make a better world for our industry!

Contact us

Tel: +86-755-8981 8866 Fax: +86-755-8427 6832
Email & Skype: info@chipsmall.com Web: www.chipsmall.com
Address: A1208, Overseas Decoration Building, #122 Zhenhua RD., Futian, Shenzhen, China

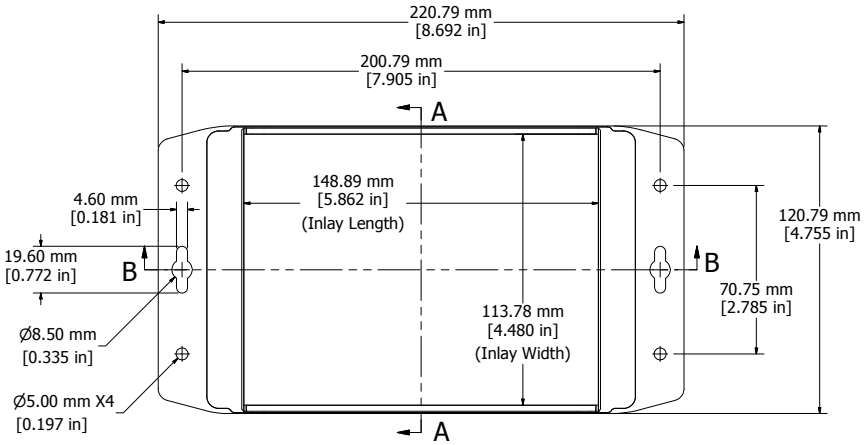

ENCLOSURE ASSEMBLY TOP VIEW

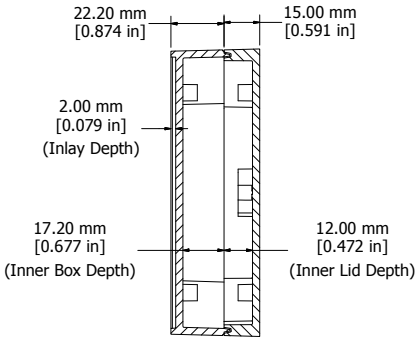

SECTION A-A
END VIEW OF ASSEMBLY

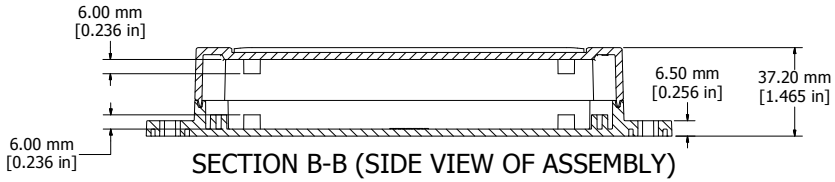

SECTION B-B (SIDE VIEW OF ASSEMBLY)

Enclosures can be Factory Modified (Milling, Drilling, Printing etc.)
Solid models of this enclosure available in STEP or IGES.
Contact Factory mjm@hammondmfg.com

NOTE
Purchased assembly includes box, lid, 4 cover screws & preformed silicone gasket. Steel panel not supplied.
Cover screws should be torqued to 2.5 lbf-in (30 cN-m)

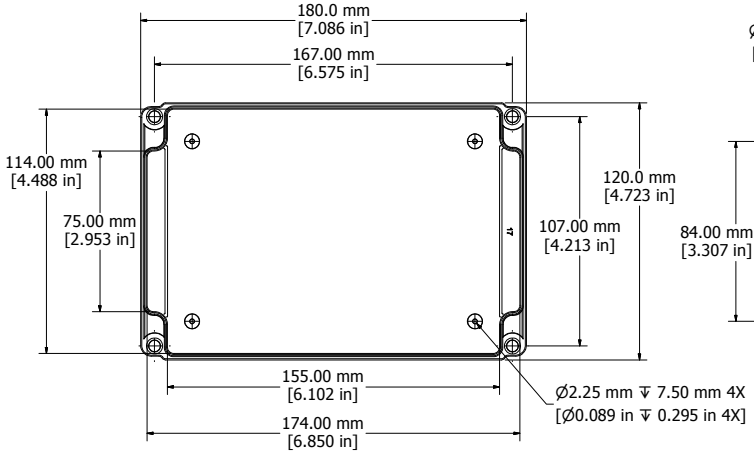

BOX INSIDE VIEW

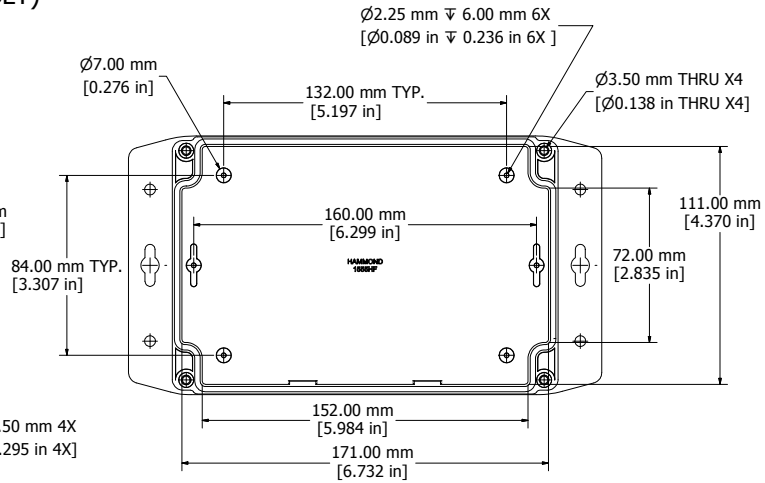

FLANGED LID INSIDE VIEW

1555HF17	
1555HF17 Regular Enclosure	
General Purpose ABS RAL-7035 UL94 - HB	1555HF17GY
Poycarbonate RAL-7035 - V0 / 5VA @ 3mm	1555H2F17GY
ACCESSORIES	
Heavy Duty 16 Gauge Galvanized Steel Panels	1555HFPL
Steel Panel / P.C. Board Self Tapping Screw [#4 X 1/4" (6.4mm) Nickel Plated]	1555TS100
Cover Screws (Pkg 4) [M4 X 20mm Stainless Steel]	SC1554

HAMMOND MANUFACTURING™

1555HF17

www.hammondmfg.com