Chipsmall Limited consists of a professional team with an average of over 10 year of expertise in the distribution of electronic components. Based in Hongkong, we have already established firm and mutual-benefit business relationships with customers from,Europe,America and south Asia,supplying obsolete and hard-to-find components to meet their specific needs.

With the principle of “Quality Parts,Customers Priority,Honest Operation,and Considerate Service”,our business mainly focus on the distribution of electronic components. Line cards we deal with include Microchip,ALPS,ROHM,Xilinx,Pulse,ON,Everlight and Freescale. Main products comprise IC,Modules,Potentiometer,IC Socket,Relay,Connector.Our parts cover such applications as commercial,industrial, and automotives areas.

We are looking forward to setting up business relationship with you and hope to provide you with the best service and solution. Let us make a better world for our industry!

Contact us

Tel: +86-755-8981 8866 Fax: +86-755-8427 6832
Email & Skype: info@chipsmall.com Web: www.chipsmall.com
Address: A1208, Overseas Decoration Building, #122 Zhenhua RD., Futian, Shenzhen, China

PART NO. W/O CAP IN TUBE	CKT SIZE	DIMENSION				
		A	B	C	D	E
87833-262*	26	24.00	26.85	28.65	27.00	20.00

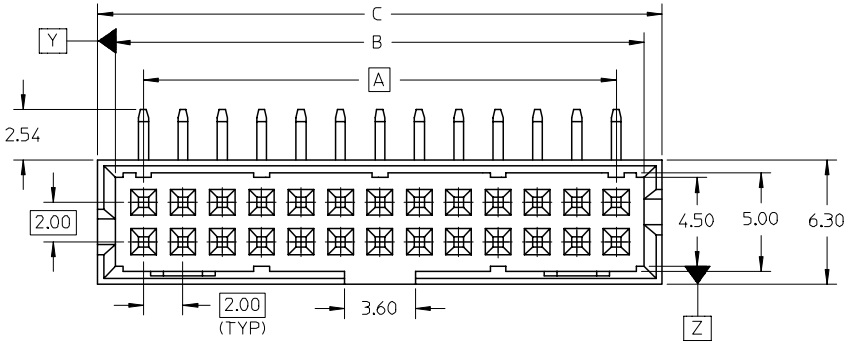

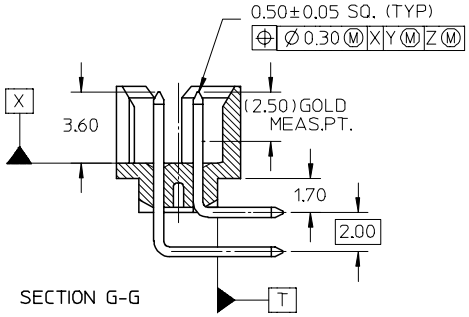

SECTION G-G

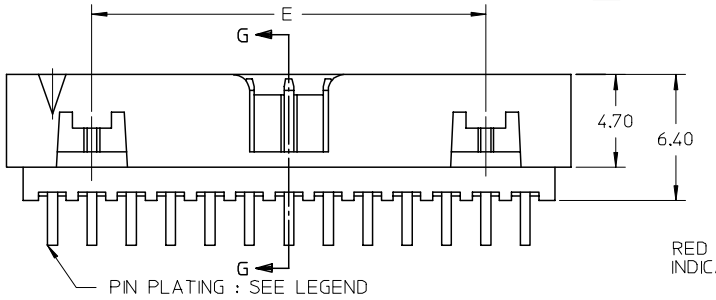

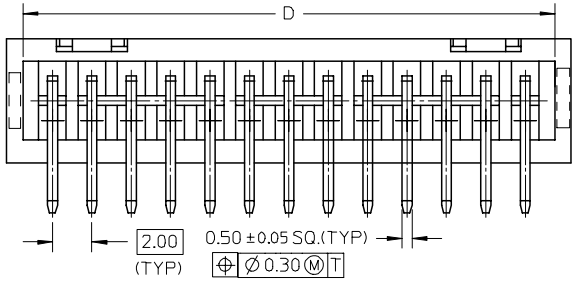

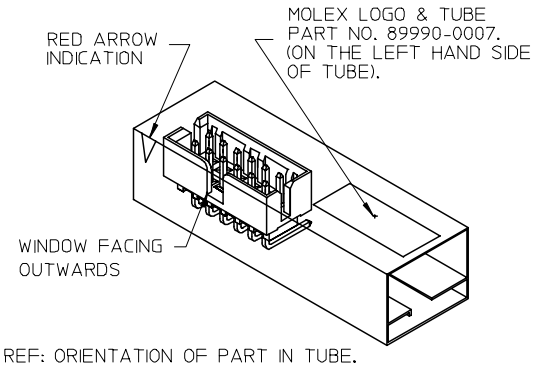

REF: ORIENTATION OF PART IN TUBE.

(FOR THE REFERENCE OF PART/TUBE ASSEMBLY.)

PART NUMBER LEGEND :

87833 - 26 * *

PLATING OPTIONS:

22 - 0.38um/15uin GOLD IN CONTACT AREA AND 1.88um/75uin MIN. TIN IN SOLDER TAIL AREA OVER 1.27um/50uin MIN. NICKEL OVERALL.

23 - 0.76um/30uin GOLD IN CONTACT AREA AND 1.88um/75uin MIN.TIN IN SOLDER TAIL AREA OVER 1.27um/50uin MIN. NICKEL OVERALL.

NOTES:

1. MATERIAL :
   HOUSING : 30% G.F., NYLON 46, UL94V-0, COLOR BLACK.
   PIN : 0.50MM SQ.PHOSPHOR BRONZE.
2. PIN PUSHOUT FORCE : 0.91 KG MIN. IN EITHER DIRECTION.
3. PRODUCT SPECIFICATION PS-87831-027 APPLIES.
4. PRODUCT HAS A WIDER POLARIZATION SLOT COMPARE TO THE STANDARD FAMILY SERIES.
5. THIS HEADER MATES WITH MOLEX:
   a) CRIMP RECEPTACLE HOUSING, 51110 SERIES WITH CRIMP TERMINAL, 50394 SERIES.
   b) 2MM MILLIGRID DUAL ROW IDT, 87568 SERIES.
6. PARTS TO BE PACKED IN TUBE WITH MOISTURE BARRIER BAG.

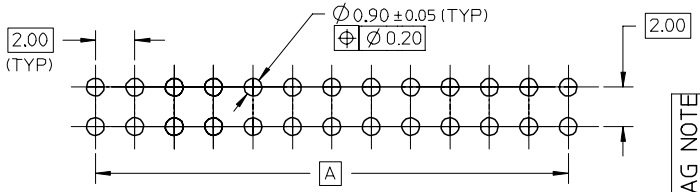

RECOMMENDED PCB PATTERN

ADD MOIST BAG NOTE
EC NO: S2007-0931 2007/05/30
DRWN:GMENARLY 2007/06/01
CHKD:SKANG 2007/06/01
APPR:MLONG
DESCRIPTION
A3
REV

QUALITY SYMBOLS
▼=0
(C)=0

GENERAL TOLERANCES (UNLESS SPECIFIED)

	mm	INCH
4 PLACES	± ---	± ---
3 PLACES	± ---	± ---
2 PLACES	± 0.2	± ---
1 PLACE	± ---	± ---
ANGULAR ± 3 °		

DRAFT WHERE APPLICABLE MUST REMAIN WITHIN DIMENSIONS

DIMENSION STYLE: MM ONLY
SCALE: NTS
DESIGN UNITS: METRIC
THIRD ANGLE PROJECTION

DRAWN BY: ATSEE DATE: 2003/10/27
CHECKED BY: KCLING DATE: 2003/11/07
APPROVED BY: SKTOH DATE: 2003/11/07
MATERIAL NO.: SEE TABLE

TITLE: MGRID, SHROUDED HEADER W/SLOTS AND STANDOFF R/A

molex MOLEX INCORPORATED

DOCUMENT NO.: SD-87833-018
SHEET NO.: 1 OF 1
SIZE: A3

THIS DRAWING CONTAINS INFORMATION THAT IS PROPRIETARY TO MOLEX INCORPORATED AND SHOULD NOT BE USED WITHOUT WRITTEN PERMISSION