Chipsmall Limited consists of a professional team with an average of over 10 year of expertise in the distribution of electronic components. Based in Hongkong, we have already established firm and mutual-benefit business relationships with customers from,Europe,America and south Asia,supplying obsolete and hard-to-find components to meet their specific needs.

With the principle of “Quality Parts,Customers Priority,Honest Operation,and Considerate Service”,our business mainly focus on the distribution of electronic components. Line cards we deal with include Microchip,ALPS,ROHM,Xilinx,Pulse,ON,Everlight and Freescale. Main products comprise IC,Modules,Potentiometer,IC Socket,Relay,Connector.Our parts cover such applications as commercial,industrial, and automotives areas.

We are looking forward to setting up business relationship with you and hope to provide you with the best service and solution. Let us make a better world for our industry!

Contact us

Tel: +86-755-8981 8866 Fax: +86-755-8427 6832
Email & Skype: info@chipsmall.com Web: www.chipsmall.com
Address: A1208, Overseas Decoration Building, #122 Zhenhua RD., Futian, Shenzhen, China

REV	
A	DT06-4S-CE06

REVISIONS

SYM	DESCRIPTION	DATE	APPROVED
NC	NEW RELEASE PER E.O. P15980	3/31/99	RDR
A	REVISED PER E.O. P16254	10-4-99	RDR

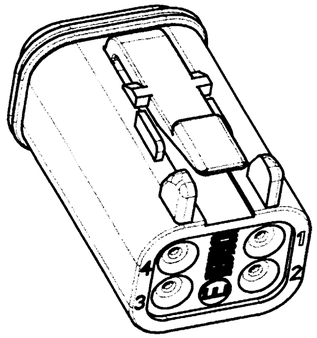

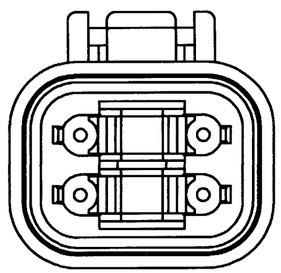

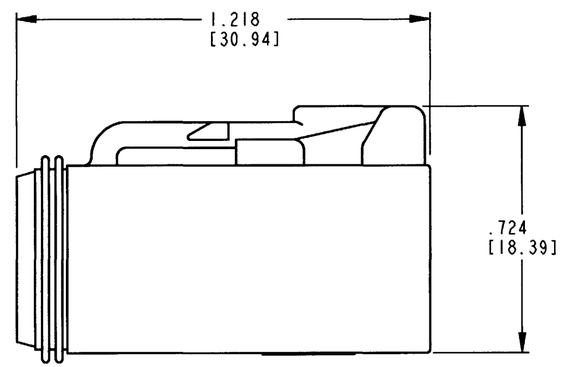

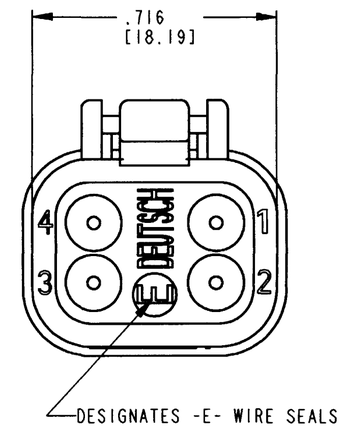

CONTACT SIZE	MIN. INSUL O.D.	MAX. INSUL O.D.	WIRE RANGE [mm^2]
16	.053 [1.35]	.120 [3.05]	14-20 AWG [2.0-0.5]

5. THIS PLUG MATES WITH THE DT04-4P-**** RECEPTACLE (**** = ALL MODIFICATIONS).
4. FOR MORE INFO. SEE ENVELOPE DRAWING 0425-017-0000 AND 0425-015-0000.
3. CONSULT FACTORY FOR SPECIFICATIONS AND APPLICATION.
2. ALL DIMENSIONS ARE ±.025[0.63] UNLESS OTHERWISE SPECIFIED.
1. ALL DIMENSIONS ARE INCHES [MILLIMETERS].

NOTES:

	SIGNATURE & DATE
DR	D. SPENCER 17MAR99
CHK	10/1/99
PE	10-1-99
APPD	R. Reed 10-4-99
SCALE 3.5:1	WT —

4 WAY PLUG
CE06 MOD.
DT SERIES

ENVELOPE

CP — MATL. CODE

The Deutsch Company
DEUTSCH I.P.D.
3850 INDUSTRIAL AVE.
HEMET, CALIF. 92545

B — DWG SIZE — DT06-4S-CE06

CODE 11139 — SHEET 1 OF 1