Chipsmall Limited consists of a professional team with an average of over 10 year of expertise in the distribution of electronic components. Based in Hongkong, we have already established firm and mutual-benefit business relationships with customers from,Europe,America and south Asia,supplying obsolete and hard-to-find components to meet their specific needs.

With the principle of “Quality Parts,Customers Priority,Honest Operation,and Considerate Service”,our business mainly focus on the distribution of electronic components. Line cards we deal with include Microchip,ALPS,ROHM,Xilinx,Pulse,ON,Everlight and Freescale. Main products comprise IC,Modules,Potentiometer,IC Socket,Relay,Connector.Our parts cover such applications as commercial,industrial, and automotives areas.

We are looking forward to setting up business relationship with you and hope to provide you with the best service and solution. Let us make a better world for our industry!

# Contact us

Tel: +86-755-8981 8866 Fax: +86-755-8427 6832
Email & Skype: info@chipsmall.com Web: www.chipsmall.com
Address: A1208, Overseas Decoration Building, #122 Zhenhua RD., Futian, Shenzhen, China

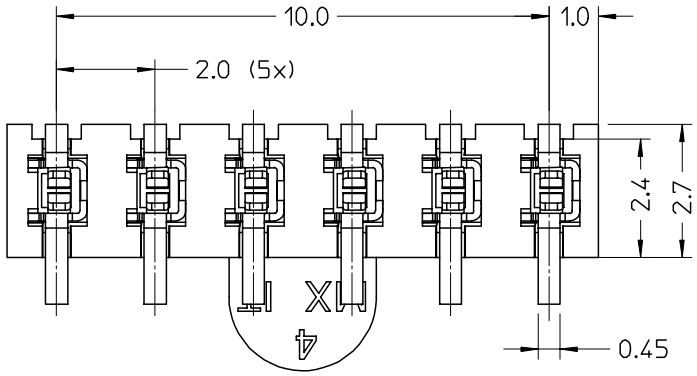


RECOMMENDED PCB LAYOUT
(VIEW FROM COMPONENT SIDE)
SCALE 5:1

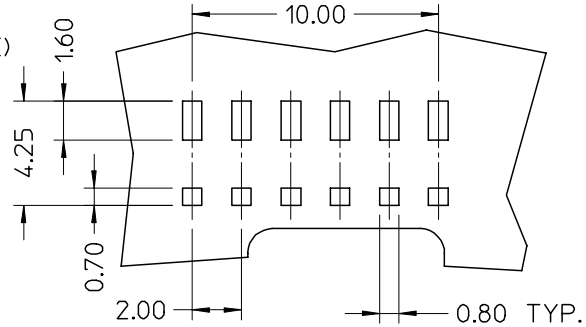


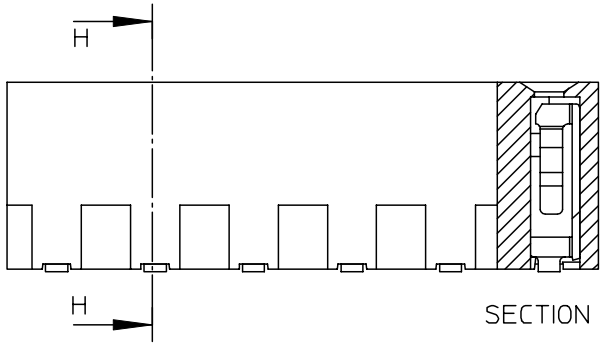


SECTION G-G

SECTION H-H

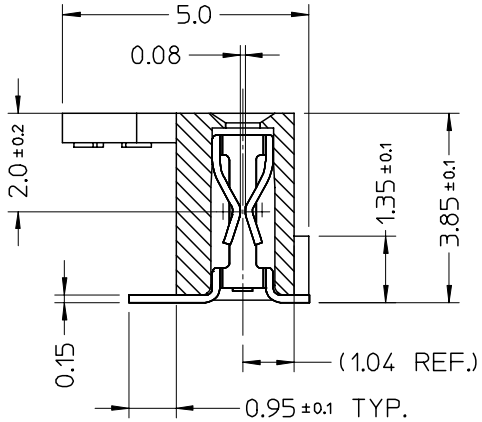


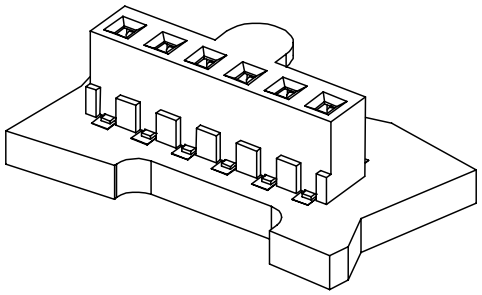

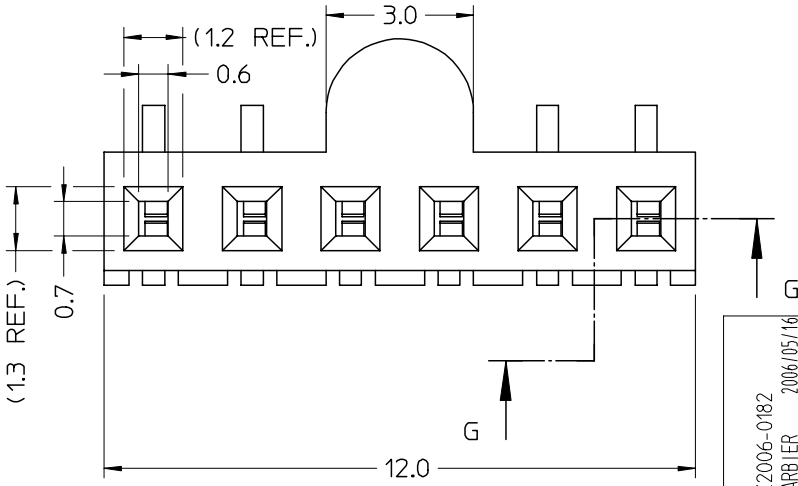


NOTES
1) MATERIALS:
- HOUSING: BLACK PA 46, 30 % GF, UL 94 V0
- TERMINALS: 4 um PRETINNED PhBz
2) SMT LEADS COPLANARITY: 0.15 mm MAX
3) PACKAGING: IN TAPE & REEL
4) SPQ: 16800 pcs/BOX (2400 pcs/REEL - 7 REELS/BOX)
5) PRODUCT CHARACTERISTICS: ACCORDING TO PS 94103-005

Std. Descr.: SIP SOCKET SMT 6 CKT

| | | |
|---|---|---|
| EC NO: Z2006-0182 | 2006/05/16 | DESCRIPTION |
| DRWN:SBARBIER | 2006/05/16 | |
| CHKD:RSANDANO | 2006/05/16 | |
| APPR:FBISELLO | 2006/05/16 | |
| B | | REV |

QUALITY SYMBOLS
▼=0
▽=0

GENERAL TOLERANCES (UNLESS SPECIFIED)

| | mm | INCH |
|---|---|---|
| 4 PLACES | ± --- | ± --- |
| 3 PLACES | ± --- | ± --- |
| 2 PLACES | ± 0.05 | ± --- |
| 1 PLACE | ± 0.10 | ± --- |
| ANGULAR ± 2 ° | | |

DRAFT WHERE APPLICABLE MUST REMAIN WITHIN DIMENSIONS

| | | | |
|---|---|---|---|
| DIMENSION STYLE: MM ONLY | SCALE: 10:1 | DESIGN UNITS: METRIC | FIRST ANGLE PROJECTION |
| DRAWN BY: SBARBIER | DATE: 1999/04/20 | TITLE: 6 CKT SIP SOCKET SMT VERSION | |
| CHECKED BY: SSORATO | DATE: 1999/04/20 | | |
| APPROVED BY: RMARTUCC | DATE: 1999/04/20 | molex MOLEX INCORPORATED | |
| MATERIAL NO.: 94103-5006 | | DOCUMENT NO.: SD-94103-004 | SHEET NO.: 1 OF 1 |
| SIZE: A3 | | | |

THIS DRAWING CONTAINS INFORMATION THAT IS PROPRIETARY TO MOLEX INCORPORATED AND SHOULD NOT BE USED WITHOUT WRITTEN PERMISSION