Chipsmall Limited consists of a professional team with an average of over 10 year of expertise in the distribution of electronic components. Based in Hongkong, we have already established firm and mutual-benefit business relationships with customers from,Europe,America and south Asia,supplying obsolete and hard-to-find components to meet their specific needs.

With the principle of “Quality Parts,Customers Priority,Honest Operation,and Considerate Service”,our business mainly focus on the distribution of electronic components. Line cards we deal with include Microchip,ALPS,ROHM,Xilinx,Pulse,ON,Everlight and Freescale. Main products comprise IC,Modules,Potentiometer,IC Socket,Relay,Connector.Our parts cover such applications as commercial,industrial, and automotives areas.

We are looking forward to setting up business relationship with you and hope to provide you with the best service and solution. Let us make a better world for our industry!

Contact us

Tel: +86-755-8981 8866 Fax: +86-755-8427 6832
Email & Skype: info@chipsmall.com Web: www.chipsmall.com
Address: A1208, Overseas Decoration Building, #122 Zhenhua RD., Futian, Shenzhen, China

SIGN	DATE	DESCRIPTION	APPROVER

THIS IS CAD DRAWING, DO NOT REVISE MANUALLY!!!

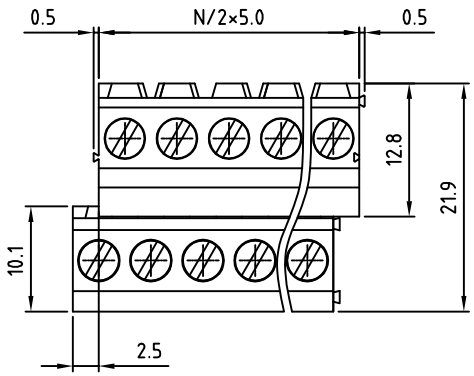

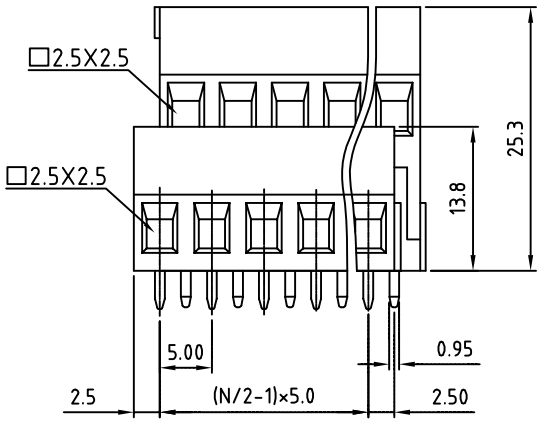

N=Number of poles

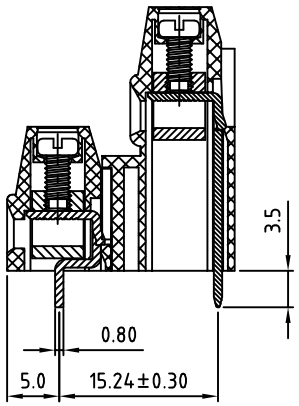

Material

- Terminal body
- (metal housing): Brass(CuZn)
- Terminal screw: Steel Zinc plating "-" slot type
- Contacts: Brass
- Surface of solder tail: Tin plated
- Insulator (housing): Thermoplastic (UL94V-0)

Electrical

- Voltage rating: 300VAC
- Current rating: 20A
- Wire range:
  Solid wire(AWG): 12-22
  Stranded wire(AWG): 12-22
- Torque(Lb-In): 3.5
- Screw: M2.5
- Wire strip length: 6-7mm
- Withstanding Voltage: 1.6KV
- Operating temperature: -30°C to +105°C
- Soldering temperature: 250°C±10°C/5 Sec
- Safety Approval: c UL us

RoHS Compliant

PART NUMBER:

OSTYLXX0150

No. of Poles
- 04: 2×02 Poles
- 06: 2×03 Poles
- : :
- 48 2×24 Poles

COLOR
- 0: Black
- 5: Green (Standard)
- 6: Blue
- 8: Grey

P.C.B LAYOUT

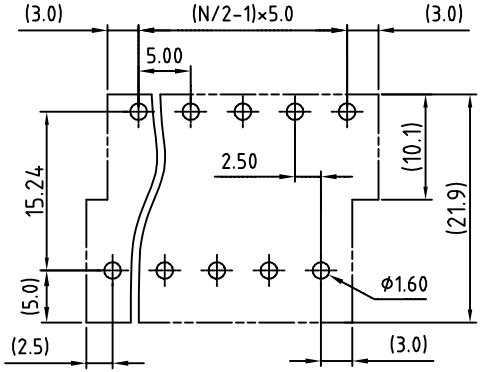

THESE DRAWINGS AND SPECIFICATIONS ARE THE PROPERTY OF ON-SHORE TECHNOLOGY, INC. AND SHALL NOT BE REPRODUCED, COPIED OR USED IN ANY MANNER WITHOUT THE PRIOR WRITTEN CONSENT OF ON-SHORE TECHNOLOGY, INC.

ON-SHORE TECHNOLOGY, INC.

TITLE	OSTYL-5.0mm Series Left				
PART NO.	OSTYLXX0150			DWG NO.	OSTYLXX0150.DWG
APPROVED	CHECKED	DESIGNED	DRAWN	CUST NO.	
Shi Jun 2006.10.20	Shi Jun 2006.10.20	xionghaitao 2006.10.20	xionghaitao 2006.10.20	UNIT: mm / SCALE: NONE / SHEET: 01/01 / REV.: D	

Tolerance	
X.	±0.50
X.X	±0.30
X.XX	±0.10
X°	±1°