Chipsmall Limited consists of a professional team with an average of over 10 year of expertise in the distribution of electronic components. Based in Hongkong, we have already established firm and mutual-benefit business relationships with customers from,Europe,America and south Asia,supplying obsolete and hard-to-find components to meet their specific needs.

With the principle of “Quality Parts,Customers Priority,Honest Operation,and Considerate Service”,our business mainly focus on the distribution of electronic components. Line cards we deal with include Microchip,ALPS,ROHM,Xilinx,Pulse,ON,Everlight and Freescale. Main products comprise IC,Modules,Potentiometer,IC Socket,Relay,Connector.Our parts cover such applications as commercial,industrial, and automotives areas.

We are looking forward to setting up business relationship with you and hope to provide you with the best service and solution. Let us make a better world for our industry!

Contact us

Tel: +86-755-8981 8866 Fax: +86-755-8427 6832
Email & Skype: info@chipsmall.com Web: www.chipsmall.com
Address: A1208, Overseas Decoration Building, #122 Zhenhua RD., Futian, Shenzhen, China

THIS DRAWING IS UNPUBLISHED.
VERTRAULICHE UNVEROEFFENTLICHTE ZEICHNUNG
© COPYRIGHT 1998 BY AMP INCORPORATED. ALL RIGHTS RESERVED. ALLE RECHTE VORBEHALTEN

RELEASED FOR PUBLICATION ,2000.
FREI FUER VEROEFFENTLICHUNG

MATED WITH:
PASSEND ZU:
Bg6

LOC	DIST
A1	–

PROJEKT NR.: –

REVISIONS
AENDERUNGEN

P	LTR	DESCRIPTION BESCHREIBUNG	DATE	DWN	APVD
	A3	Drawing active again; ECR-07-024206	11.10.2007	AR	ST

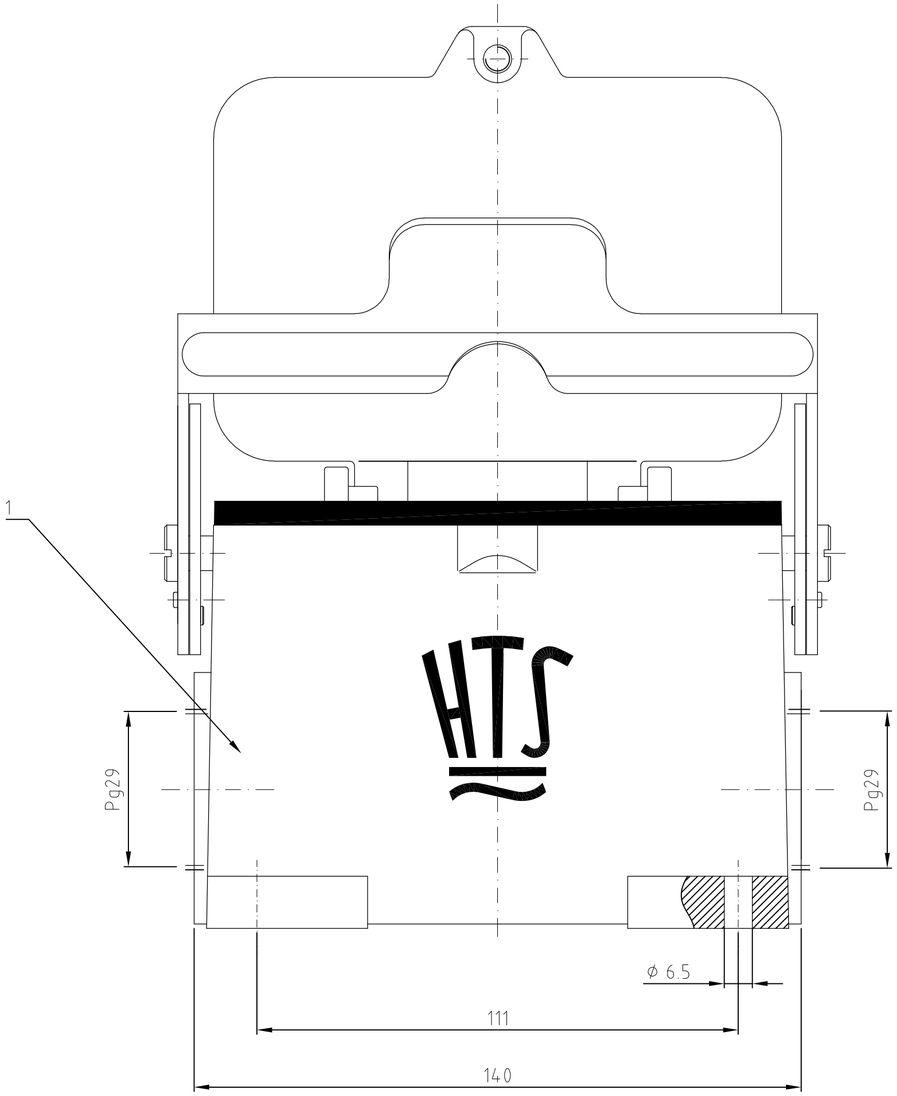

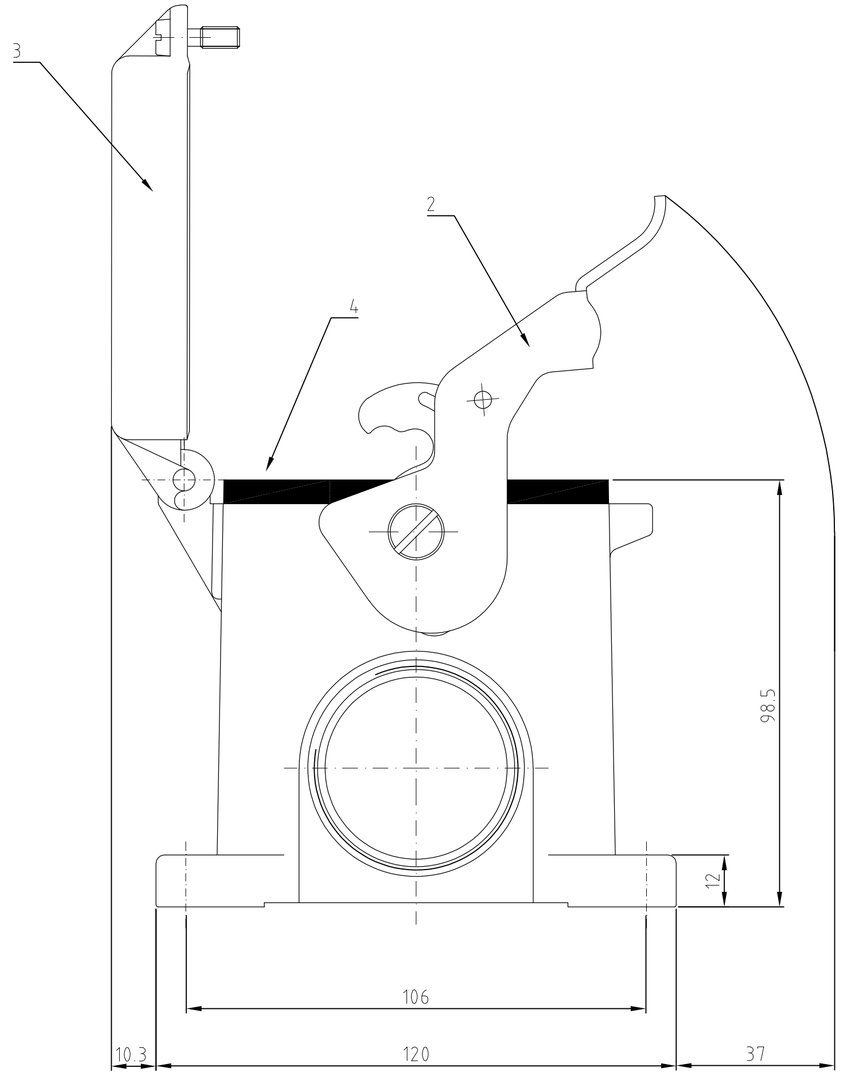

Notes,

1. Material: Housing: aluminium diecasting alloy
2. Surface: Powder coated grey
3. Varnish on the inside not necessary
4. Packaging quantity 3 pieces

Bemerkungen,

1. Material: Gehäuse: Alu-Druckguß-Legierung
2. Oberfläche: Pulverbeschichtet grau
3. Lackierung im Gehäuseinnere ist nicht notwendig
4. Verpackungsmenge 3 Stück

1-2	DESCRIPTION/ BENENNUNG	MATERIAL	SURFACE / OBERFLÄCHE	COLOR / FARBE	ITEM NO. POS.	REMARKS / BEMERKUNGEN
1	Profildichtung/profile seal	Neoprene		black/schwarz	4	
1	Deckel/cover	Aluminium/ALU		grey/grau	3	
1	LB-Bügel/side clip	Stahl/steel	verzinkt/zink plated	blau/blue	2	
1	Sockelgehäuse HA/ surface mounted housing side entry	Aluminium/ALU		grey/grau	1	

HA.64.SGD-LB.2.29.Z

ORDERING TEXT / BESTELLTEXT

THIS DRAWING IS A CONTROLLED DOCUMENT FOR AMP INCORPORATED. IT IS SUBJECT TO CHANGE AND THE CONTROLLING ENGINEERING ORGANIZATION SHOULD BE CONTACTED FOR THE LATEST REVISION.
DIESES ZEICHNUNGSDOKUMENT WIRD DURCH AMP INCORPORATED KONTROLLIERT. AENDERUNGEN, DIE DEM TECHNISCHEN FORTSCHRITT DIENEN, SIND VORBEHALTEN. DEN JEWEILS LETZTGUELTIGEN AENDERUNGSSTAND ERFAHREN SIE AUF ANFRAGE.

DIMENSIONS: DIMENSIONEN: mm

TOLERANCES UNLESS OTHERWISE SPECIFIED: ALLGEMEINTOLERANZEN
n. ISO 8015
n. ISO 2768 – mH –E
n. DIN 16901 – 140
0 PLC #
1 PLC #
2 PLC #
3 PLC #
ANGLES / WINKEL #

MATERIAL

FINISH / OBERFLAECHE/FARBE

DWN Schneider 03.07.2003
CHK Schweiger 03.07.2003
APVD –
PRODUCT SPEC PRODUKTSPEZ. –
APPLICATION SPEC VERABEITUNGSSPEZ. –
WEIGHT GEWICHT –

AMP
HTS Elektrotechnik
53819 Neunkirchen, Germany

NAME
Surface mounted housing bottom entry
Sockelgehäuse HA.64.SGD-LB.2.29.Z

SIZE A2
CAGE CODE 00779
DRAWING NO ZEICHNUNGS-NR. C- 1102013
RESTRICTED TO NUR FUER –

CUSTOMER DRAWING /KUNDENZEICHNUNG
SCALE MASSSTAB 1 : 1
SHEET BLATT 1 OF VON 1
REV A3