Chipsmall Limited consists of a professional team with an average of over 10 year of expertise in the distribution of electronic components. Based in Hongkong, we have already established firm and mutual-benefit business relationships with customers from,Europe,America and south Asia,supplying obsolete and hard-to-find components to meet their specific needs.

With the principle of “Quality Parts,Customers Priority,Honest Operation,and Considerate Service”,our business mainly focus on the distribution of electronic components. Line cards we deal with include Microchip,ALPS,ROHM,Xilinx,Pulse,ON,Everlight and Freescale. Main products comprise IC,Modules,Potentiometer,IC Socket,Relay,Connector.Our parts cover such applications as commercial,industrial, and automotives areas.

We are looking forward to setting up business relationship with you and hope to provide you with the best service and solution. Let us make a better world for our industry!

Contact us

Tel: +86-755-8981 8866 Fax: +86-755-8427 6832
Email & Skype: info@chipsmall.com Web: www.chipsmall.com
Address: A1208, Overseas Decoration Building, #122 Zhenhua RD., Futian, Shenzhen, China

Apr.1.2017 Copyright 2017 HIROSE ELECTRIC CO., LTD. All Rights Reserved.

	COUNT	DESCRIPTION OF REVISIONS	BY	CHKD	DATE		COUNT	DESCRIPTION OF REVISIONS	BY	CHKD	DATE
△					. .	△					. .
△					. .	△					. .
△					. .	△					. .

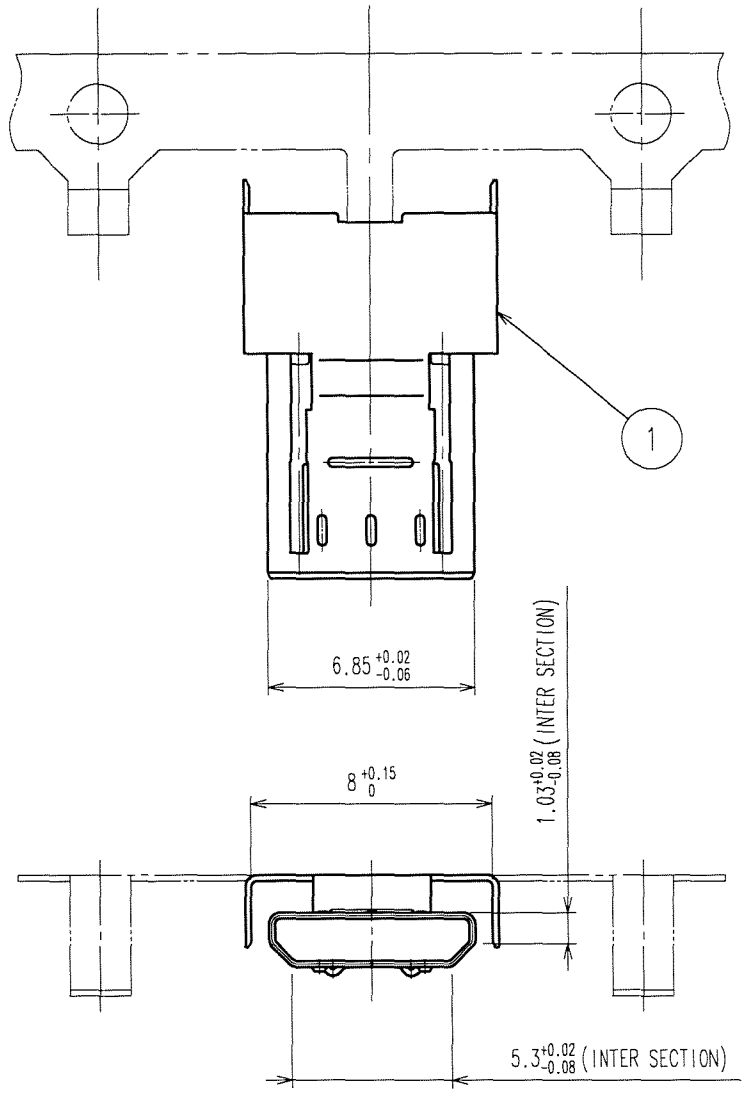

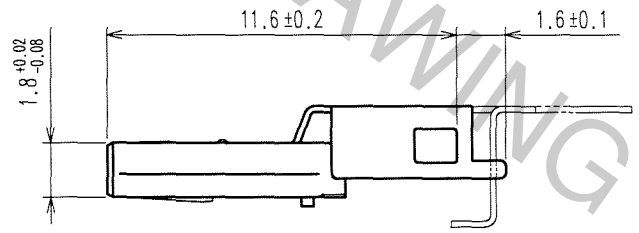

1 Fig-1 REELING(FREE)

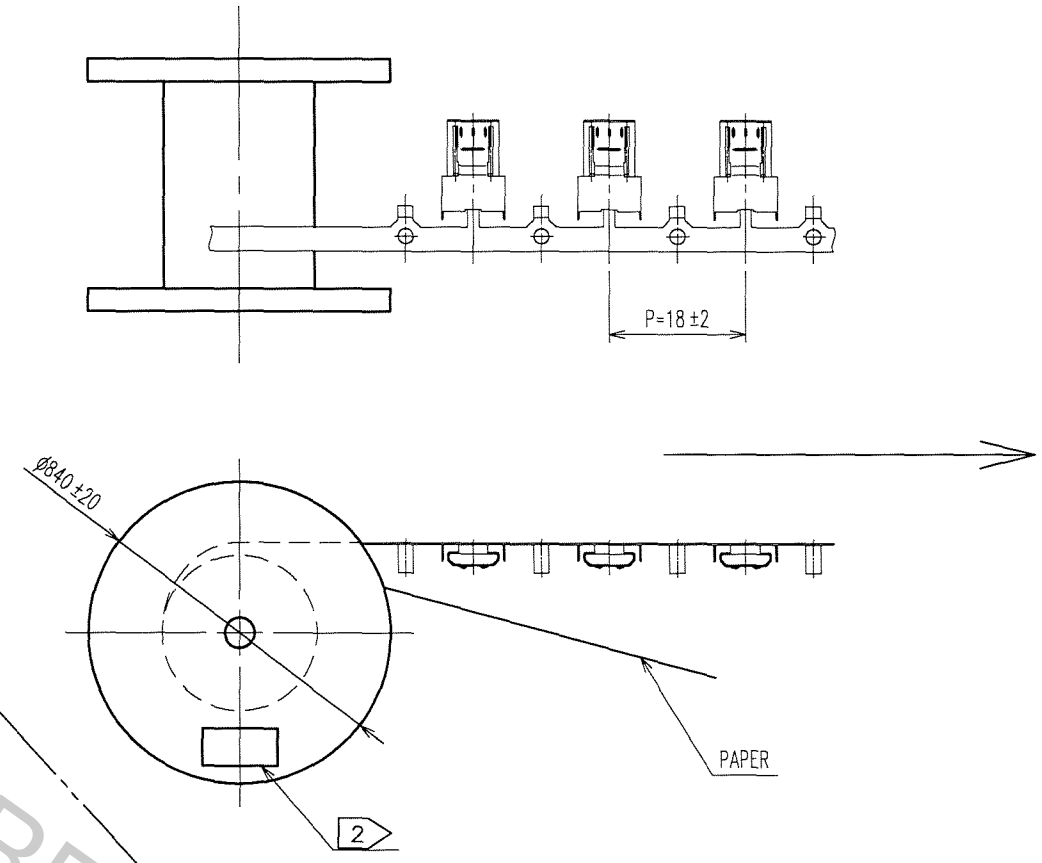

3 Fig-2 CUT OFF A CAREER(FREE)

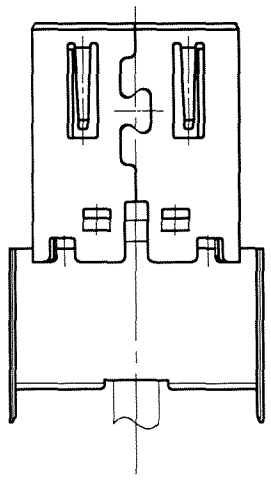

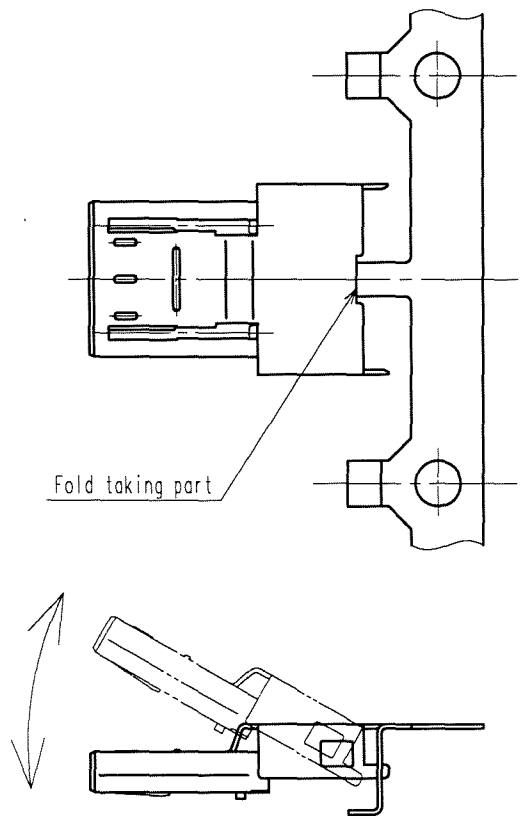

NOTE 1 This is delivered by a reel.QTY:4000pcs.

2 Shown on a reel and a box is ; "Part No.", "Code No.", "Lot No.", "QTY"

3 Cut off a career as shown in Fig-2.

NO.	MATERIAL	FINISH, REMARKS
1	STAINLESS STEEL	Nickel 0.1 μm min.

CODE NO.(OLD)	DRAWN	DESIGNED	CHECKED	APPROVED	RELEASED
	T.Sakaijawa '07.03.06	T.Sakaijawa '07.03.06	H. Tomahu '07.03.06	'07.03.06	. .

SCALE 4 : 1	DRAWING NO. EDC3-126148	PART NO. ZX20-B-SLDC
UNITS mm	HRS HIROSE ELECTRIC CO., LTD	CODE NO. CL242-0022-1 1/1

FORM NO.229

TO

HRS DRAWING FOR REFERENCE