Chipsmall Limited consists of a professional team with an average of over 10 year of expertise in the distribution of electronic components. Based in Hongkong, we have already established firm and mutual-benefit business relationships with customers from,Europe,America and south Asia,supplying obsolete and hard-to-find components to meet their specific needs.

With the principle of “Quality Parts,Customers Priority,Honest Operation,and Considerate Service”,our business mainly focus on the distribution of electronic components. Line cards we deal with include Microchip,ALPS,ROHM,Xilinx,Pulse,ON,Everlight and Freescale. Main products comprise IC,Modules,Potentiometer,IC Socket,Relay,Connector.Our parts cover such applications as commercial,industrial, and automotives areas.

We are looking forward to setting up business relationship with you and hope to provide you with the best service and solution. Let us make a better world for our industry!

Contact us

Tel: +86-755-8981 8866 Fax: +86-755-8427 6832
Email & Skype: info@chipsmall.com Web: www.chipsmall.com
Address: A1208, Overseas Decoration Building, #122 Zhenhua RD., Futian, Shenzhen, China

THIS DRAWING IS UNPUBLISHED. RELEASED FOR PUBLICATION ,19 .
© COPYRIGHT 19 BY AMP INCORPORATED. ALL RIGHTS RESERVED.

LOC	DIST
FT	60

REVISIONS

P	LTR	DESCRIPTION	DATE	DWN	APVD
	G	REDRAWN & REV PER EC 0320-74-97	15 APR 97	–	–

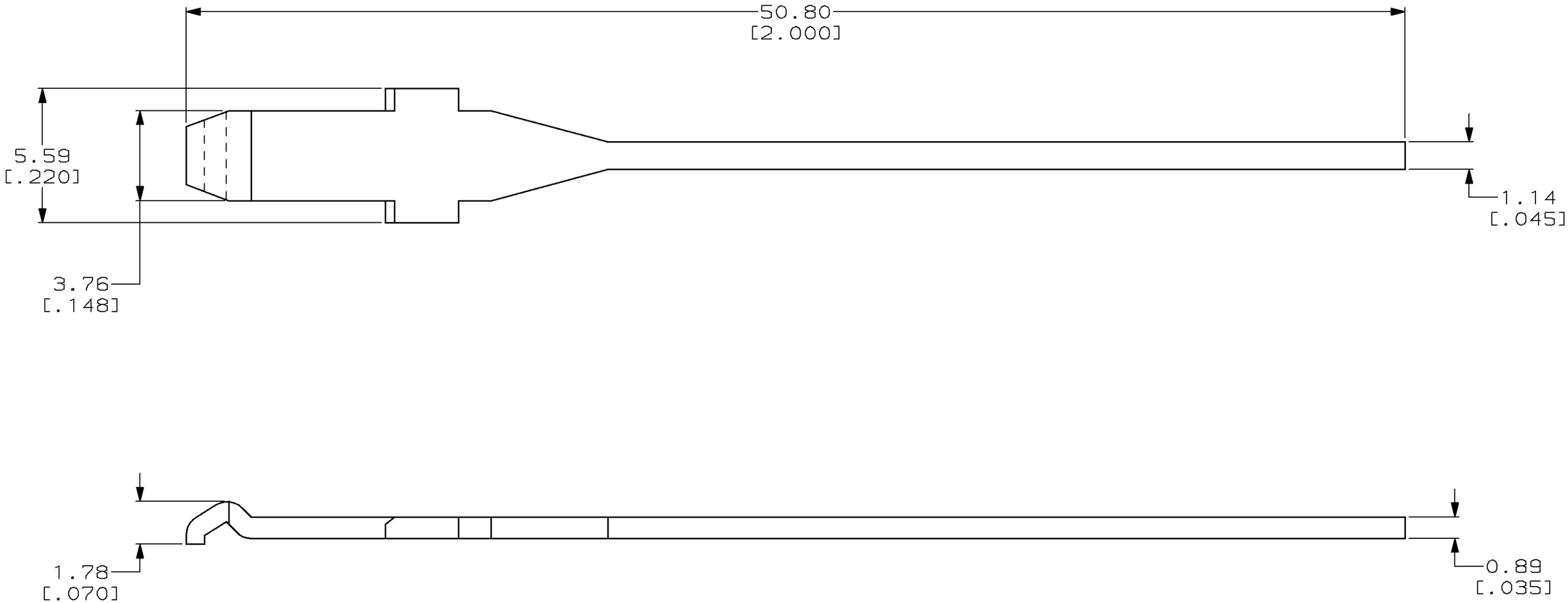

1	54326-2
2	54326-1
FINISH	PART NUMBER

1 5.08µm [.000200] MIN SILVER.

2 0.76µm [.000030] MIN GOLD OVER
1.27µm [.000050] MIN NICKEL.

THIS DRAWING IS A CONTROLLED DOCUMENT.

DIMENSIONS: mm [INCHES]

TOLERANCES UNLESS OTHERWISE SPECIFIED:
0 PLC ±–
1 PLC ±–
2 PLC ±0.51 [.020]
3 PLC ±–
4 PLC ±–
ANGLES ±–

MATERIAL: COPPER ALLOY
FINISH: SEE TABLE

DWN M.BINNER 15 APR 97
CHK R.STONE 24 APR 97
APVD M.MCALONIS 22 MAY 97
PRODUCT SPEC 108-11026
APPLICATION SPEC 114-6032
WEIGHT –

AMP Incorporated
Harrisburg, PA 17105-3608

NAME: CONTACT, SERIES 1, POSTED, PCB, POWER LOCK

SIZE	CAGE CODE	DRAWING NO	RESTRICTED TO
A3	00779	C-54326	–

CUSTOMER DRAWING | SCALE 6:1 | SHEET 1 OF 1 | REV G

AMP 1470-19 REV 27JUN96