Chipsmall Limited consists of a professional team with an average of over 10 year of expertise in the distribution of electronic components. Based in Hongkong, we have already established firm and mutual-benefit business relationships with customers from,Europe,America and south Asia,supplying obsolete and hard-to-find components to meet their specific needs.

With the principle of “Quality Parts,Customers Priority,Honest Operation,and Considerate Service”,our business mainly focus on the distribution of electronic components. Line cards we deal with include Microchip,ALPS,ROHM,Xilinx,Pulse,ON,Everlight and Freescale. Main products comprise IC,Modules,Potentiometer,IC Socket,Relay,Connector.Our parts cover such applications as commercial,industrial, and automotives areas.

We are looking forward to setting up business relationship with you and hope to provide you with the best service and solution. Let us make a better world for our industry!

Contact us

Tel: +86-755-8981 8866 Fax: +86-755-8427 6832
Email & Skype: info@chipsmall.com Web: www.chipsmall.com
Address: A1208, Overseas Decoration Building, #122 Zhenhua RD., Futian, Shenzhen, China

THIS DRAWING IS UNPUBLISHED. RELEASED FOR PUBLICATION -,- .
© COPYRIGHT - BY TYCO ELECTRONICS CORPORATION. ALL INTERNATIONAL RIGHTS RESERVED.

LOC	DIST
G	86

REVISIONS

P	LTR	DESCRIPTION	DATE	DWN	APVD
	G	REVISED PER ECO-09-012378	06JUN09	CT	JW

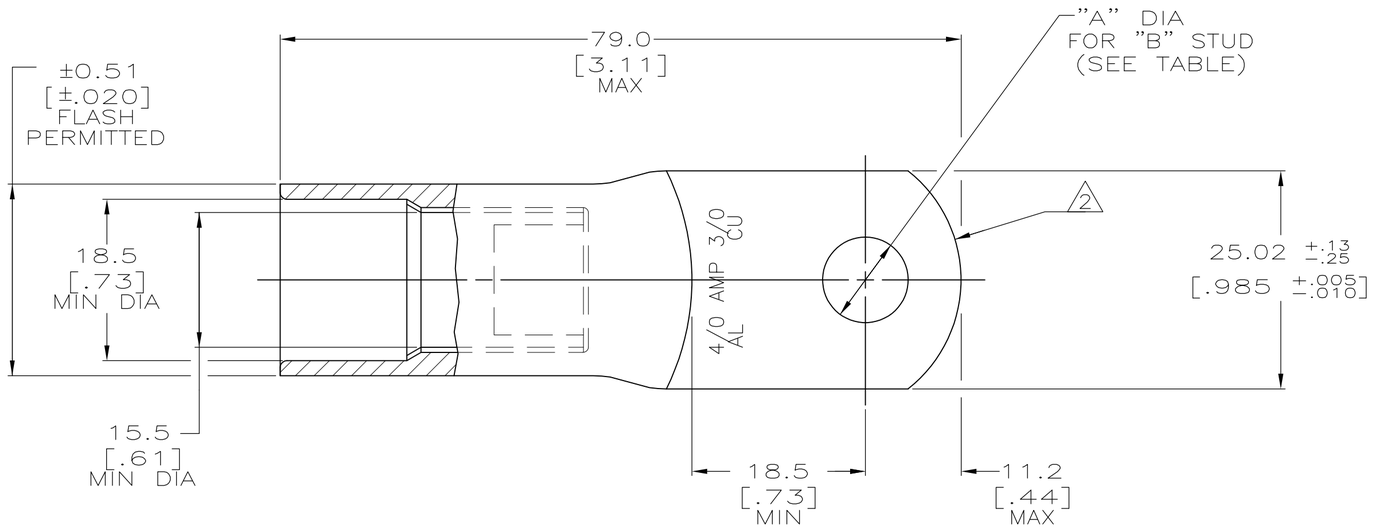

1 WIRE INSULATION: 14.98[.590] – 17.27[.680] DIA

2 THE TONGUE RADIUS FEATURE IS NOT A TOOLING CONTROLLED DIMENSION AND MAY NOT BE A TRUE RADIUS.

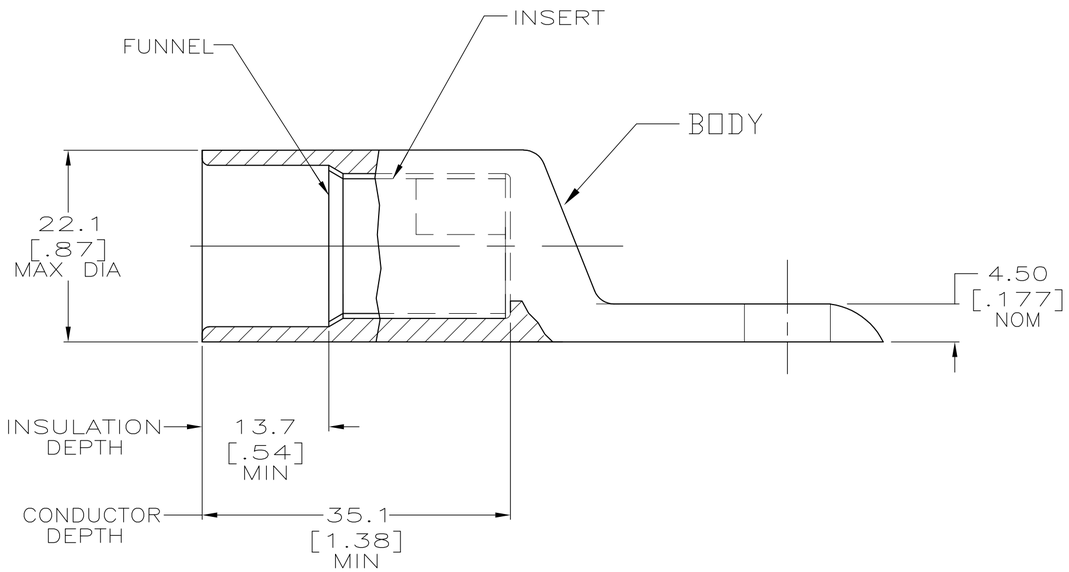

"B" STUD	"A" DIA	MATERIAL & FINISH	PART NO
5/16	8.33±0.13 DIA [.328±.005]	BODY: COPPER ASTM-B187 ANNEALED TIN PL 0.00381[.000150] MIN THK PER MIL-T-10727 INSERT & FUNNEL: BRASS ASTM B36 NICKEL PL SAE AMS QQ-N-290A, DATED JULY 2000, 0.00254 [.000100] MIN THK	55995-2
3/8	9.91±0.13 DIA [.390±.005]	BODY: COPPER ASTM-B187 ANNEALED TIN PL 0.00381[.000150] MIN THK PER MIL-T-10727 INSERT & FUNNEL: BRASS ASTM B36 NICKEL PL SAE AMS QQ-N-290A, DATED JULY 2000, 0.00254 [.000100] MIN THK	55995-1

THIS DRAWING IS A CONTROLLED DOCUMENT.

DIMENSIONS: MM [INCHES]

TOLERANCES UNLESS OTHERWISE SPECIFIED:
0 PLC ± -
1 PLC ± -
2 PLC ± -
3 PLC ± .005
4 PLC ± -
ANGLES ± 5°

MATERIAL: SEE TABLE
FINISH: SEE TABLE

DWN jr ruth 27FEB08
CHK WJ VOCKROTH 08FEB09
APVD JL MECKLEY 08FEB95
PRODUCT SPEC 108-11011
APPLICATION SPEC 114-2134
WEIGHT 100 GRAMS

Tyco Electronics
Tyco Electronics Corporation
Harrisburg, Pa 17105-3608

NAME: TERMINAL, RING TONGUE, SEALED COPALUM, 106.95mm2 [4/0] ALUMINUM 86.30mm2 [3/0] COPPER

SIZE	CAGE CODE	DRAWING NO	RESTRICTED TO
A2	00779	C-55995	—

CUSTOMER DRAWING | SCALE 2:1 | SHEET 1 OF 1 | REV G

55995

1471-9 (1/08)