Chipsmall Limited consists of a professional team with an average of over 10 year of expertise in the distribution of electronic components. Based in Hongkong, we have already established firm and mutual-benefit business relationships with customers from,Europe,America and south Asia,supplying obsolete and hard-to-find components to meet their specific needs.

With the principle of “Quality Parts,Customers Priority,Honest Operation,and Considerate Service”,our business mainly focus on the distribution of electronic components. Line cards we deal with include Microchip,ALPS,ROHM,Xilinx,Pulse,ON,Everlight and Freescale. Main products comprise IC,Modules,Potentiometer,IC Socket,Relay,Connector.Our parts cover such applications as commercial,industrial, and automotives areas.

We are looking forward to setting up business relationship with you and hope to provide you with the best service and solution. Let us make a better world for our industry!

Contact us

Tel: +86-755-8981 8866 Fax: +86-755-8427 6832
Email & Skype: info@chipsmall.com Web: www.chipsmall.com
Address: A1208, Overseas Decoration Building, #122 Zhenhua RD., Futian, Shenzhen, China

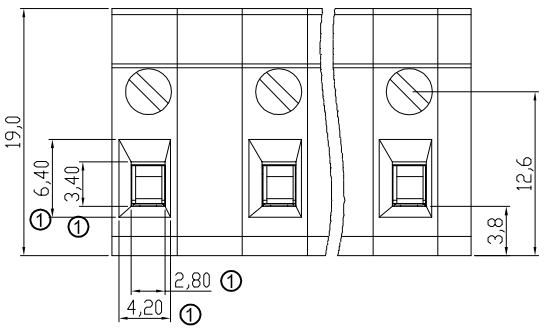

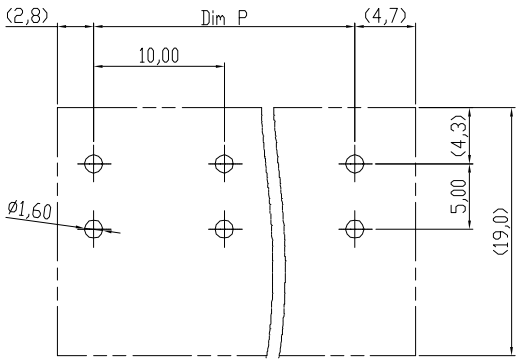

PCB Layout

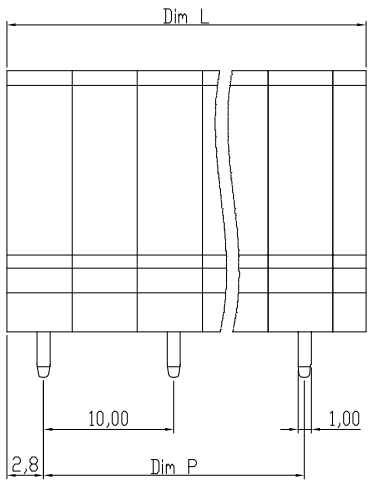

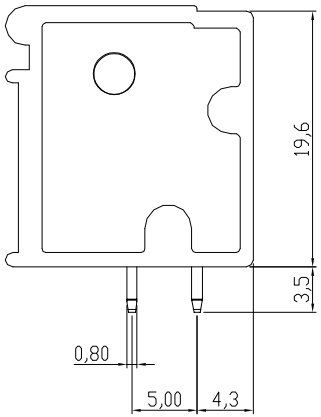

Material

Terminal body: steel stamping clamp Zinc plating
Terminal screw: Steel Zinc plating "-" slot type
Solder pin: Brass,Tin plated
Firm wire chunk: steel Zinc plating
Terminal housing: Thermoplastic (UL94V-0)
GREEN(RAL6018/T)
Terminal cover:Thermoplastic(UL94V-0)
GREEN(RAL6018/T)

Electrical cULus

Voltage rating: 300VAC
Current rating: 20A
Wire range:
Solid wire(AWG): 12-22
Stranded wire(AWG): 12-22
Torque(Lb-In): 2.4
Screw: M2.5
Wire strip length: 10-11mm
Withstanding Voltage: 1.6KV
Operating temperature: -40°C to +115°C
Soldering temperature: 250°C±10°C/5 Sec
Safety Approval: c us

DIMENSION

L	Nx10.0-2.5
P	(N-1)x10.0

N=Number of poles

Poles	Tolerance	
	DIM L	DIM P
2p-4p	±0.20	±0.20
5p-8p	±0.30	±0.30
9p-12p	±0.40	±0.40

RoHS compliant
Unit: mm

① File No.: E349947

Scale	Free
TOLERANCE	
X.	±0.50
X.X	±0.30
X.XX	±0.10
DIM	TOL
X.°	±1°
Angle	TOL

Id.	Modification	Date	Name
①	Update to new drawing and add UL	15.03.2016	Amy
⓪	Drawn	19.04.2010	Alex

	Date	Name
Drawn	19.04.2010	Alex
Approved	15.03.2016	Amy

ASSMANN wsw components

Customer-No.

ASSMANN WSW-No.
A-TB100-TRxxV

Drawing-No.
ASS 4100 CO

rev01

Replace

Sheet