Chipsmall Limited consists of a professional team with an average of over 10 year of expertise in the distribution of electronic components. Based in Hongkong, we have already established firm and mutual-benefit business relationships with customers from,Europe,America and south Asia,supplying obsolete and hard-to-find components to meet their specific needs.

With the principle of “Quality Parts,Customers Priority,Honest Operation,and Considerate Service”,our business mainly focus on the distribution of electronic components. Line cards we deal with include Microchip,ALPS,ROHM,Xilinx,Pulse,ON,Everlight and Freescale. Main products comprise IC,Modules,Potentiometer,IC Socket,Relay,Connector.Our parts cover such applications as commercial,industrial, and automotives areas.

We are looking forward to setting up business relationship with you and hope to provide you with the best service and solution. Let us make a better world for our industry!

Contact us

Tel: +86-755-8981 8866 Fax: +86-755-8427 6832
Email & Skype: info@chipsmall.com Web: www.chipsmall.com
Address: A1208, Overseas Decoration Building, #122 Zhenhua RD., Futian, Shenzhen, China

THIS DRAWING IS UNPUBLISHED. RELEASED FOR PUBLICATION 2006
© COPYRIGHT 2006 BY TYCO ELECTRONICS CORPORATION, ALL INTERNATIONAL RIGHTS RESERVED.

LOC J DIST

REVISIONS 変更

P	LTR	DESCRIPTION	DATE	DWN	APVD
	B	REVISED PER ECR-10-007266	20APR2010	HMR	T.M

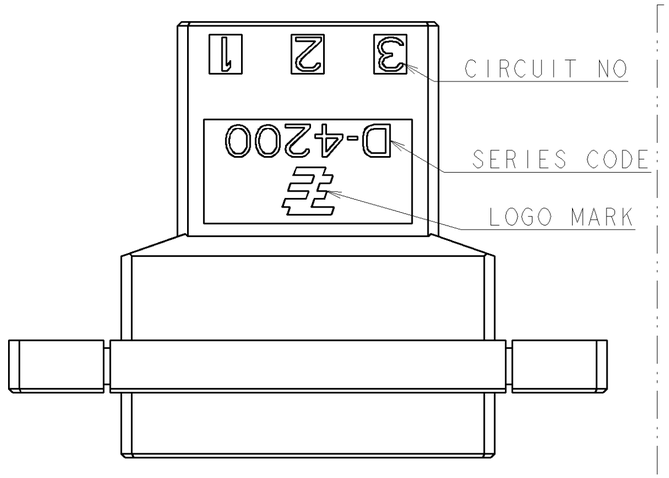

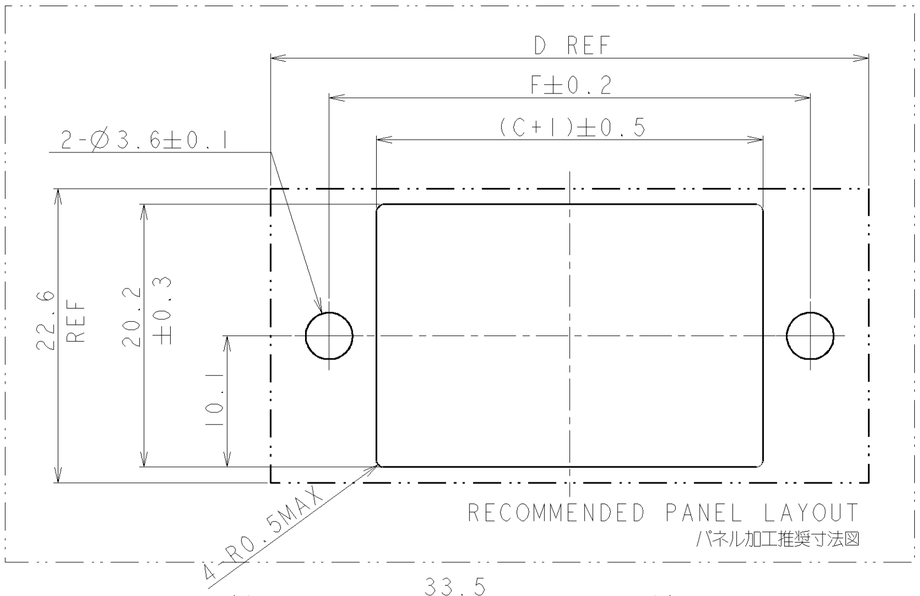

RECOMMENDED PANEL LAYOUT
パネル加工推奨寸法図

1. MATERIAL: GLASS FILED THERMO PLASTIC POLYESTER(94V-0), COLOR: BLACK
2. PANEL ATTACHMENT RECOMMENDATION M3 SCREW
3. THE SHAPE, SIZE AND POSITION OF THE CHARACTER SHOW THE OUTLINE. THEY DON'T SHOW DETAILS.

1. 材料：ガラス入り熱可塑性ポリエステル樹脂（94V-0），色：黒
2. パネル取り付け推奨ネジM3
3. 文字の形状、大きさ、および位置については、大略を示すものであり、詳細を示すものではありません。

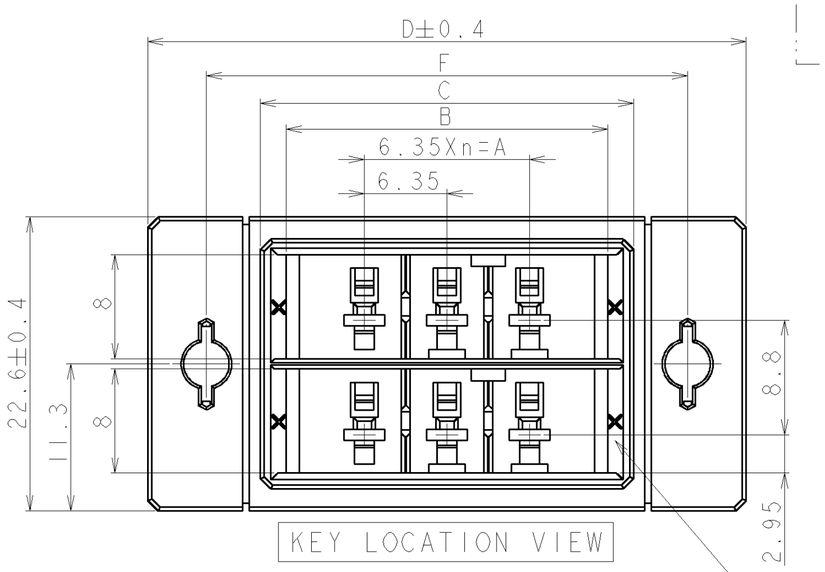

KEY LOCATION VIEW

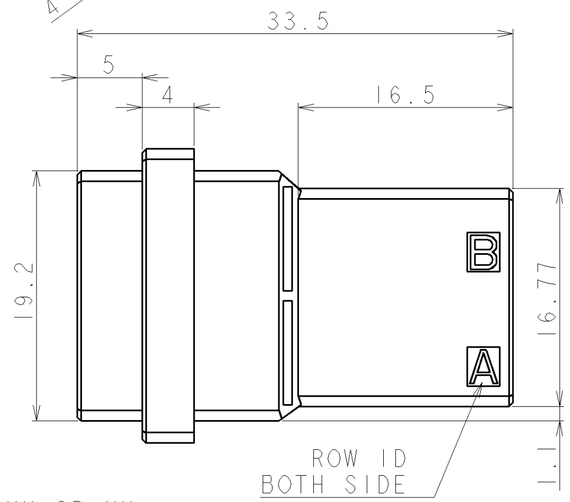

ROW ID
BOTH SIDE

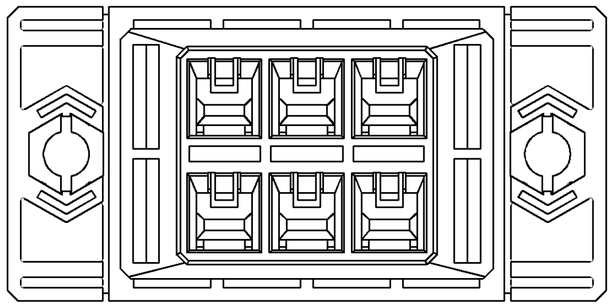

KEYING:
XX OR YY OR XY
XX : 1- -□
YY : 2- -□
XY : 3- -□

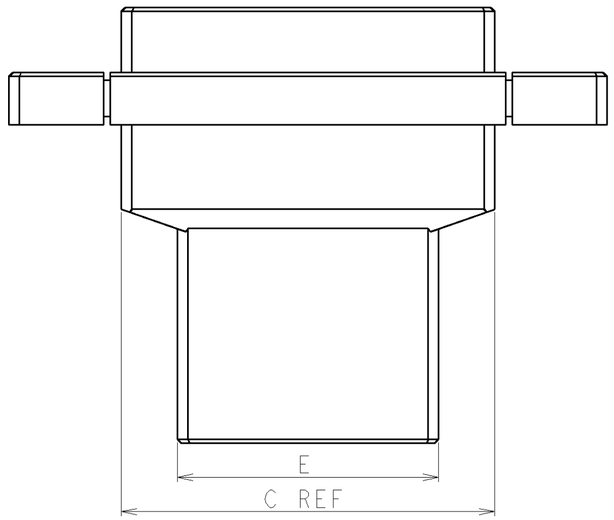

AS SHOWN : 1-1903331-3(6POS:X-X KEY)

POS	n	A	B	C	D	E	F	KEY LOCATION	KEY	PART NUMBER
6	2	12.70	24.70	28.70	46.00	20.05	37.00		X-X	1-1903331-3
6	2	12.70	24.70	28.70	46.00	20.05	37.00		Y-Y	2-1903331-3
6	2	12.70	24.70	28.70	46.00	20.05	37.00		X-Y	3-1903331-3

THIS DRAWING IS A CONTROLLED DOCUMENT FOR TYCO ELECTRONICS CORPORATION. IT IS SUBJECT TO CHANGE AND THE CONTROLLING ENGINEERING ORGANIZATION SHOULD BE CONTACTED FOR THE LATEST REVISION.

DIMENSIONS: 寸法: 特 mm

TOLERANCES UNLESS OTHERWISE SPECIFIED: 一般公差 ±0.3, ±3°
0 PLC ±
1 PLC ±
2 PLC ±
3 PLC ±
4 PLC ±
ANGLES ±

MATERIAL 材料
FINISH 仕上

DWN M.MAEBASHI 01MAY2006
CHK T.KUDO 01MAY2006
APVD D.MITSUGI 01MAY2006
PRODUCT SPEC 製品規格 108-78182
APPLICATION SPEC 取付適用規格 114-5369
WEIGHT 10.96 g

Tyco Electronics
Tyco Electronics Corporation
Kawasaki, Japan

NAME 品名
DYNAMIC D4200M 6.35mm PITCH
TAB HSG, PANEL MOUNT TYPE
6 POS

SIZE A2 | CAGE CODE 00779 | DRAWING NO 番号 C-1903331 | RESTRICTED TO

CUSTOMER DRAWING | SCALE 尺度 3:1 | SHEET 1 OF 1 | REV B