Chipsmall Limited consists of a professional team with an average of over 10 year of expertise in the distribution of electronic components. Based in Hongkong, we have already established firm and mutual-benefit business relationships with customers from,Europe,America and south Asia,supplying obsolete and hard-to-find components to meet their specific needs.

With the principle of “Quality Parts,Customers Priority,Honest Operation,and Considerate Service”,our business mainly focus on the distribution of electronic components. Line cards we deal with include Microchip,ALPS,ROHM,Xilinx,Pulse,ON,Everlight and Freescale. Main products comprise IC,Modules,Potentiometer,IC Socket,Relay,Connector.Our parts cover such applications as commercial,industrial, and automotives areas.

We are looking forward to setting up business relationship with you and hope to provide you with the best service and solution. Let us make a better world for our industry!

Contact us

Tel: +86-755-8981 8866 Fax: +86-755-8427 6832
Email & Skype: info@chipsmall.com Web: www.chipsmall.com
Address: A1208, Overseas Decoration Building, #122 Zhenhua RD., Futian, Shenzhen, China

THIS DRAWING IS UNPUBLISHED. RELEASED FOR PUBLICATION -,- .
© COPYRIGHT - By - ALL RIGHTS RESERVED.

LOC	DIST
AF	50

REVISIONS

P	LTR	DESCRIPTION	DATE	DWN	APVD
	V	REVISED PER ECR-11-018063	22DEC11	KH	PD

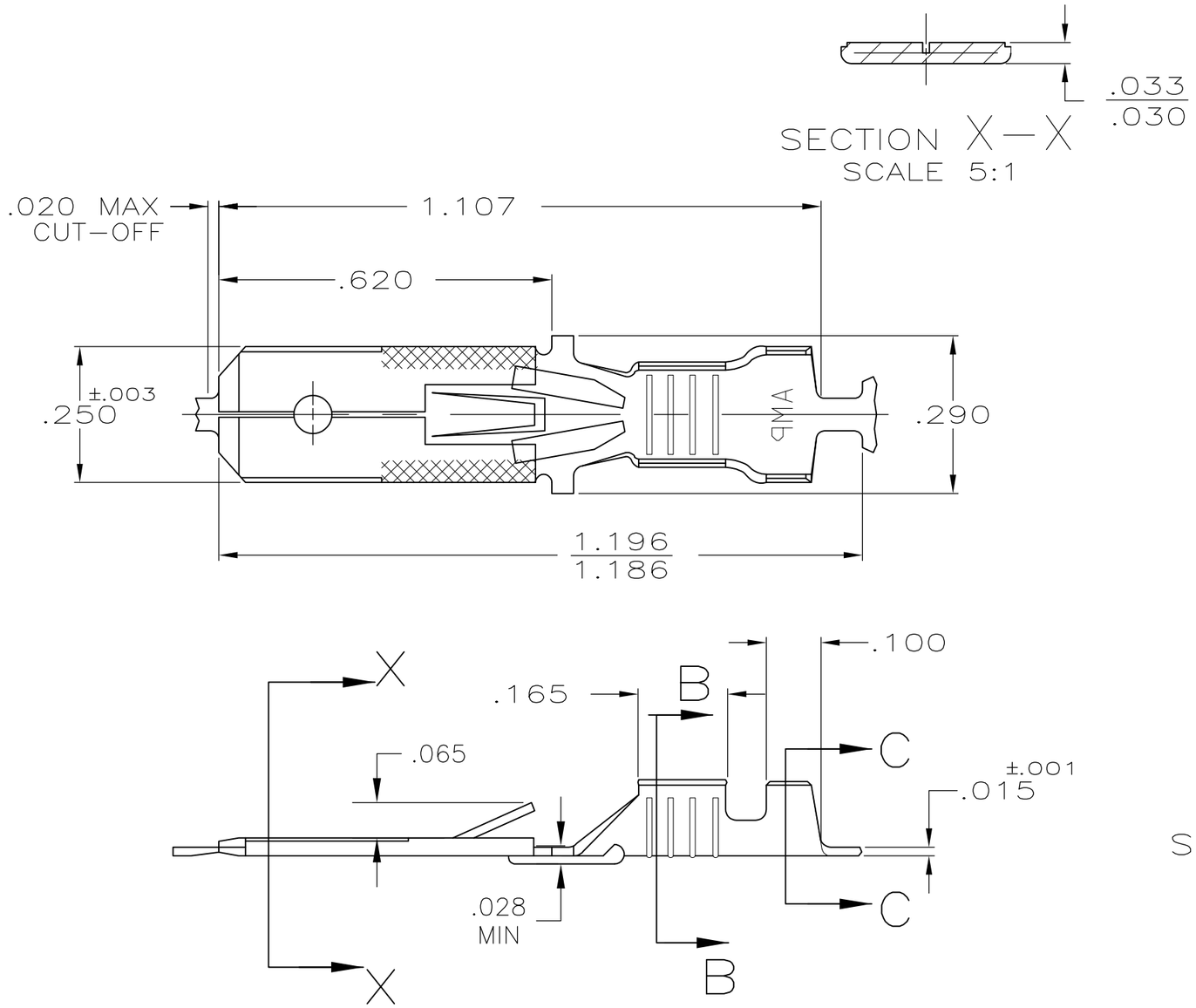

1 CONTINUOUS STRIP ON REELS

2 WIRE SIZE IS #14-#10 AWG

3 INSULATION RANGE IS .120-.170 DIA

4 FOREIGN PRODUCTION ONLY

5 .000080 MIN TIN OVER .000100 MIN COPPER UNDERPLATE OR OPTIONAL .000050 MIN NICKEL UNDERPLATE.

6 PRELIMINARY - NOT FOR PRODUCTION

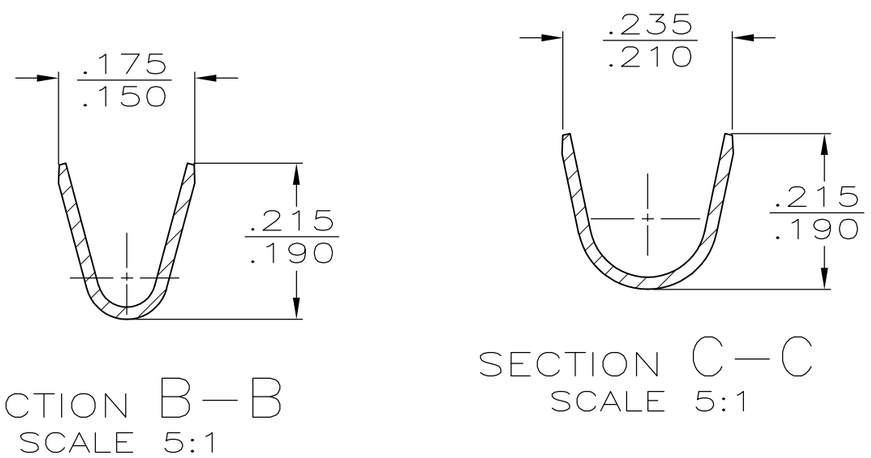

	FINISH	PART NO
	5	6 60701-4
OBSOLETE	~~PRE-TIN~~	4 ~~60701-3~~
	-	6 60701-2
	TIN	60701-1

THIS DRAWING IS A CONTROLLED DOCUMENT.

DIMENSIONS: INCHES

TOLERANCES UNLESS OTHERWISE SPECIFIED:

0 PLC	± -
1 PLC	± -
2 PLC	± -
3 PLC	± .015
4 PLC	± -
ANGLES	± -

MATERIAL: #2H BRASS

FINISH: SEE TABLE

DWN	JR RUTH	1/31/91
CHK	MS FEHER	1/31/91
APVD	J GILLESPIE	1/31/91
PRODUCT SPEC	-	
APPLICATION SPEC	-	
WEIGHT	-	

CUSTOMER DRAWING

TE Connectivity

NAME: TAB, FASTIN-FASTON, .250 SERIES -

SIZE	CAGE CODE	DRAWING NO	RESTRICTED TO
A3	00779	C-60701	-

SCALE	SHEET	REV
4:1	1 OF 1	V