Chipsmall Limited consists of a professional team with an average of over 10 year of expertise in the distribution of electronic components. Based in Hongkong, we have already established firm and mutual-benefit business relationships with customers from,Europe,America and south Asia,supplying obsolete and hard-to-find components to meet their specific needs.

With the principle of “Quality Parts,Customers Priority,Honest Operation,and Considerate Service”,our business mainly focus on the distribution of electronic components. Line cards we deal with include Microchip,ALPS,ROHM,Xilinx,Pulse,ON,Everlight and Freescale. Main products comprise IC,Modules,Potentiometer,IC Socket,Relay,Connector.Our parts cover such applications as commercial,industrial, and automotives areas.

We are looking forward to setting up business relationship with you and hope to provide you with the best service and solution. Let us make a better world for our industry!

Contact us

Tel: +86-755-8981 8866 Fax: +86-755-8427 6832
Email & Skype: info@chipsmall.com Web: www.chipsmall.com
Address: A1208, Overseas Decoration Building, #122 Zhenhua RD., Futian, Shenzhen, China

THIS DRAWING IS UNPUBLISHED. RELEASED FOR PUBLICATION -,- .
© COPYRIGHT - BY TYCO ELECTRONICS CORPORATION. ALL RIGHTS RESERVED.

LOC	DIST
G	14

REVISIONS

P	LTR	DESCRIPTION	DATE	DWN	APVD
	A1	REV PER ECR 07-026079	31OCT07	JR	TM

1 TONGUE THK IS 1.80±0.06

2 TIN PLATE PER ASTM B545 ANNEALED

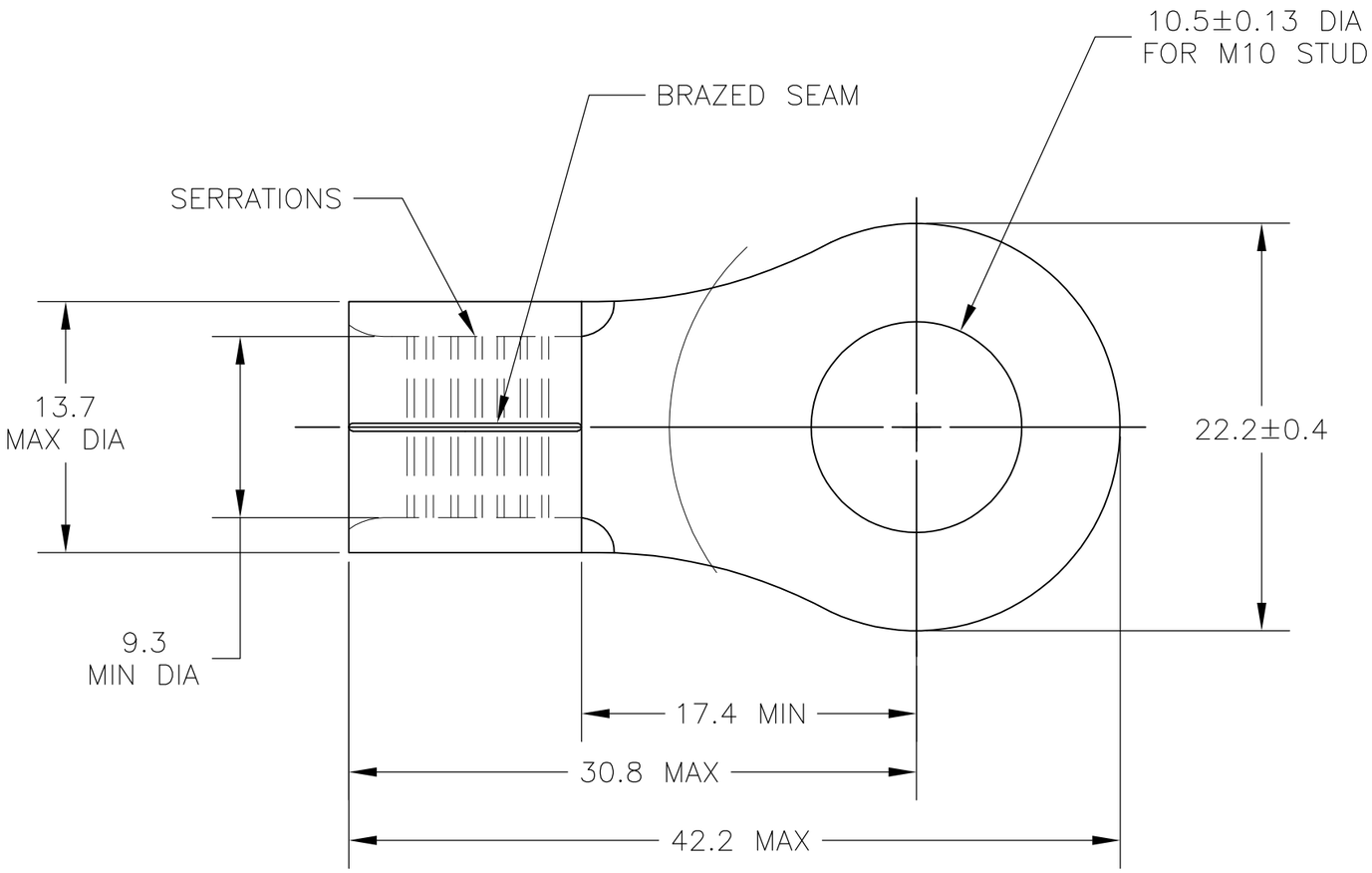

2	160002
FINISH	PART NO

THIS DRAWING IS A CONTROLLED DOCUMENT.

DIMENSIONS: INCHES

TOLERANCES UNLESS OTHERWISE SPECIFIED:
0 PLC ± –
1 PLC ± –
2 PLC ± –
3 PLC ± 0.20
4 PLC ± –
ANGLES ± 5°

MATERIAL: COPPER ASTM B152

FINISH: SEE TABLE

DWN jr ruth 02FEB06
CHK MJ SPICER 02FEB06
APVD MJ SPICER 02FEB06
PRODUCT SPEC —
APPLICATION SPEC —
WEIGHT —

CUSTOMER DRAWING

Tyco Electronics

Tyco Electronics Corporation
Harrisburg, PA 17105-3608

NAME: TERMINAL, SOLISTRAND, RING TONGUE, WIRE SIZE : #2

SIZE	CAGE CODE	DRAWING NO	RESTRICTED TO
A3	00779	C-160002	—

SCALE 3:1 SHEET 1 OF 1 REV A1