Chipsmall Limited consists of a professional team with an average of over 10 year of expertise in the distribution of electronic components. Based in Hongkong, we have already established firm and mutual-benefit business relationships with customers from,Europe,America and south Asia,supplying obsolete and hard-to-find components to meet their specific needs.

With the principle of “Quality Parts,Customers Priority,Honest Operation,and Considerate Service”,our business mainly focus on the distribution of electronic components. Line cards we deal with include Microchip,ALPS,ROHM,Xilinx,Pulse,ON,Everlight and Freescale. Main products comprise IC,Modules,Potentiometer,IC Socket,Relay,Connector.Our parts cover such applications as commercial,industrial, and automotives areas.

We are looking forward to setting up business relationship with you and hope to provide you with the best service and solution. Let us make a better world for our industry!

Contact us

Tel: +86-755-8981 8866 Fax: +86-755-8427 6832
Email & Skype: info@chipsmall.com Web: www.chipsmall.com
Address: A1208, Overseas Decoration Building, #122 Zhenhua RD., Futian, Shenzhen, China

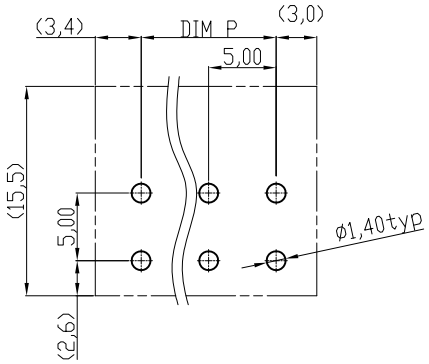

RECOMMENDER PCB LAYOUT

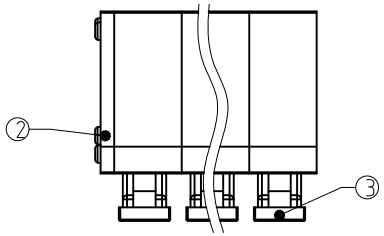

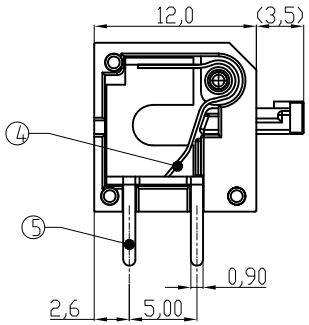

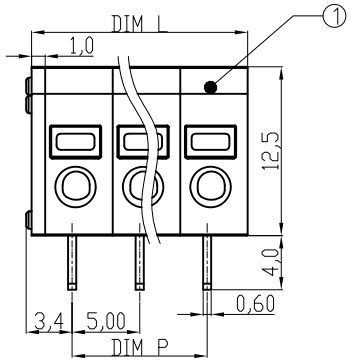

Material

①Insulating body:	Thermoplastic (UL94V-0),GREY
②Insulating cover:	Thermoplastic (UL94V-0),GREY
③Insulating lever:	Thermoplastic (UL94V-0),GREY
④Contact pin:	Brass,Tin plated
⑤Spring clamp:	Stainless steel

Electrical cULus

Voltage rating: 300V
Current rating: 6A
Wire range:
Solid wire(AWG): 16-26
Stranded wire(AWG): 16-26
Wire strip length: 6-7mm
Withstanding Voltage: 1.6KV
Operating temperature: -40°C to +115°C
Soldering temperature: 250°C±10°C/5 Sec
Safety Approval: c us

DIMENSION

L	Nx5.0+1.00
P	(N-1)x5.0

N=Number of poles

Poles	Tolerance	
	DIM L	DIM P
1p-4p	±0.15	±0.15
5p-9p	±0.20	±0.20
10p-14p	±0.30	±0.30
15p-19p	±0.40	±0.40
20p-24p	±0.50	±0.50

RoHS compliant

Scale	1:1
TOLERANCE	
X.	±0.50
X.X	±0.30
X.XX	±0.10
DIM	TOL
X.°	±1°
Angle	TOL

Id.	Modification	Date	Name
⓪	Drawn	19.04.2010	Alex

	Date	Name
Drawn	19.04.2010	Alex
Approved	19.04.2010	Hellwig

ASSMANN WSW components

Customer-No.

ASSMANN WSW-No.
A-TB500-HXxxH

Drawing-No.
ASS 4123 CO

rev00

Replace

Sheet