Chipsmall Limited consists of a professional team with an average of over 10 year of expertise in the distribution of electronic components. Based in Hongkong, we have already established firm and mutual-benefit business relationships with customers from,Europe,America and south Asia,supplying obsolete and hard-to-find components to meet their specific needs.

With the principle of “Quality Parts,Customers Priority,Honest Operation,and Considerate Service”,our business mainly focus on the distribution of electronic components. Line cards we deal with include Microchip,ALPS,ROHM,Xilinx,Pulse,ON,Everlight and Freescale. Main products comprise IC,Modules,Potentiometer,IC Socket,Relay,Connector.Our parts cover such applications as commercial,industrial, and automotives areas.

We are looking forward to setting up business relationship with you and hope to provide you with the best service and solution. Let us make a better world for our industry!

Contact us

Tel: +86-755-8981 8866 Fax: +86-755-8427 6832
Email & Skype: info@chipsmall.com Web: www.chipsmall.com
Address: A1208, Overseas Decoration Building, #122 Zhenhua RD., Futian, Shenzhen, China

THIS DRAWING IS UNPUBLISHED. RELEASED FOR PUBLICATION ,19 .
© COPYRIGHT 19 BY AMP INCORPORATED. ALL RIGHTS RESERVED.

LOC	DIST
G	14

REVISIONS

P	LTR	DESCRIPTION	DATE	DWN	APVD
	F	REVISED PER OL20-0178-97	03NOV97	DKS	CHK

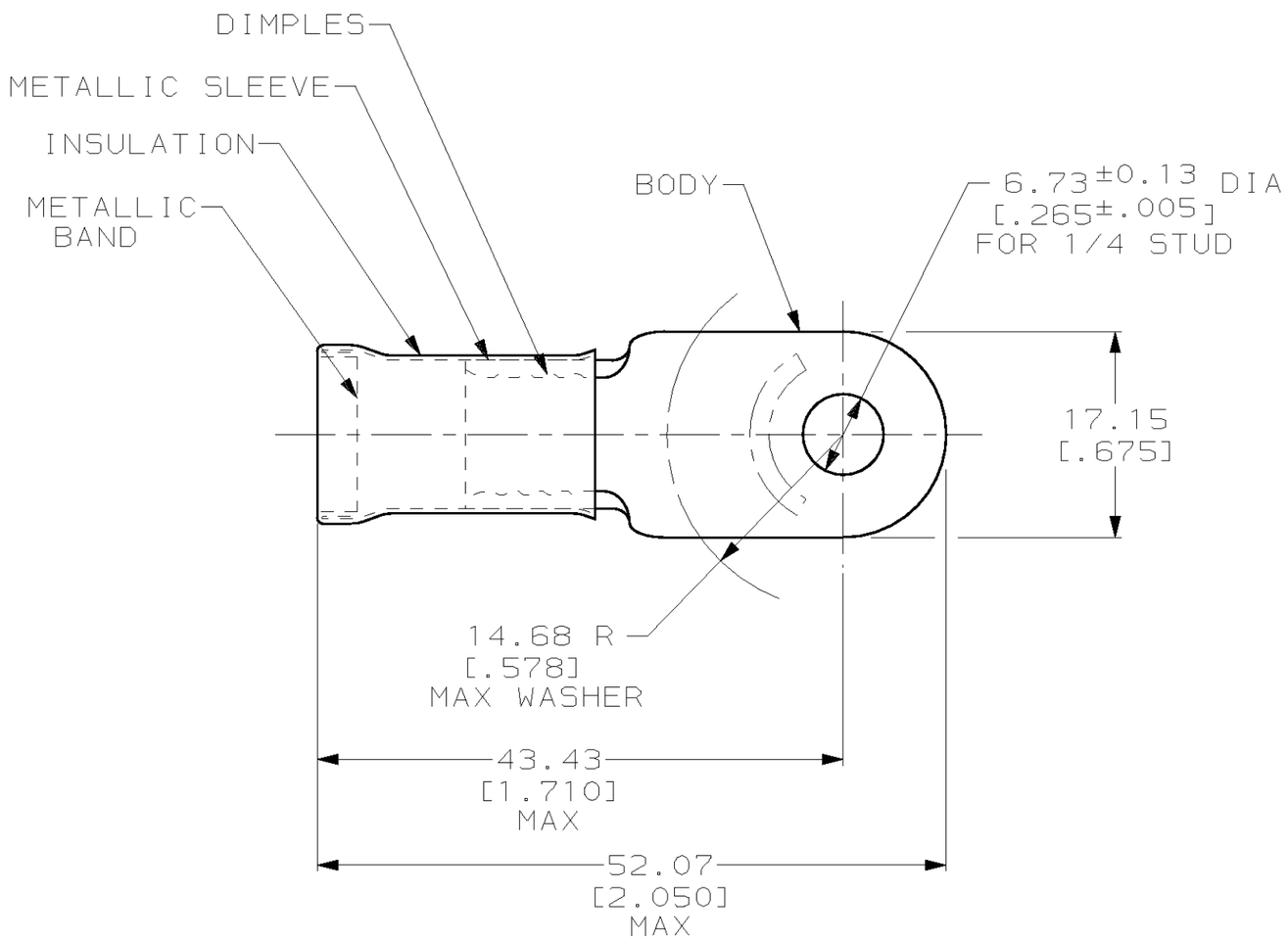

1 MATERIAL THK: 1.45 ±0.08 [.057 ±.003]

2 WIRE INSULATION DIA: 12.83[.505] MAX

3 TIN PL 0.00254[.000100] MIN THK PER ASTM B-545

4 GOLD PL 0.00127[.000050] MIN EXT THK PER MIL-G-45204 OVER NICKEL PL 0.00076[.000030] MIN EXT THK PER QQ-N-290

BODY: COPPER PER ASTM B-152
INSULATION: PVC COLOR: RED
METALLIC SLEEVE: COPPER PER ASTM B-152
METALLIC BAND: STEEL PER ASTM A-109

MATERIAL & FINISH

OBSOLETE
4 ~~2-322125-1~~

3 322125

AMP PART NUMBER

AMP INCORPORATED CUSTOMER SERVICE SYSTEMS

FOR ADDITIONAL PRODUCT INFORMATION OR COPIES OF DRAWINGS AND TECHNICAL DOCUMENTS	PRODUCT INFORMATION CENTER 1-800-522-6752
FOR APPLICATION TOOLING INFORMATION	TOOLING ASSISTANCE CENTER 1-800-722-1111
FOR ORDER ENTRY	1-800-526-5142

RECOMMENDED OPERATING TEMPERATURE: 105°C MAX

VOLTAGE RATING: NOT APPLICABLE

WIRE CROSS SECTIONAL AREA RANGE: 26.7-42.4mm² [52,600-83,700] CIR MILS SOLID OR STRANDED

THIS DRAWING IS A CONTROLLED DOCUMENT.

DIMENSIONS: mm [INCHES]

TOLERANCES UNLESS OTHERWISE SPECIFIED:

0 PLC	±-
1 PLC	±-
2 PLC	±0.20[.008]
3 PLC	±-
4 PLC	±-
ANGLES	±-

MATERIAL: SEE TABLE

FINISH: SEE TABLE

DWN	DK SCHRUM	03NOV97
CHK	MJ SPICER	03NOV97
APVD	JL MECKLEY	03NOV97
PRODUCT SPEC	–	
APPLICATION SPEC	–	
WEIGHT	–	

AMP Incorporated
Harrisburg, PA 17105-3608

NAME: TERMINAL, RING TONGUE, AMPLI-BOND™, WIRE SIZE: 2 AWG

SIZE	CAGE CODE	DRAWING NO	RESTRICTED TO
A3	00779	C- 322125	–

CUSTOMER DRAWING | SCALE 2:1 | SHEET 1 OF 1 | REV F

AMP 1470-19 REV 11JUN97