Chipsmall Limited consists of a professional team with an average of over 10 year of expertise in the distribution of electronic components. Based in Hongkong, we have already established firm and mutual-benefit business relationships with customers from,Europe,America and south Asia,supplying obsolete and hard-to-find components to meet their specific needs.

With the principle of “Quality Parts,Customers Priority,Honest Operation,and Considerate Service”,our business mainly focus on the distribution of electronic components. Line cards we deal with include Microchip,ALPS,ROHM,Xilinx,Pulse,ON,Everlight and Freescale. Main products comprise IC,Modules,Potentiometer,IC Socket,Relay,Connector.Our parts cover such applications as commercial,industrial, and automotives areas.

We are looking forward to setting up business relationship with you and hope to provide you with the best service and solution. Let us make a better world for our industry!

Contact us

Tel: +86-755-8981 8866 Fax: +86-755-8427 6832
Email & Skype: info@chipsmall.com Web: www.chipsmall.com
Address: A1208, Overseas Decoration Building, #122 Zhenhua RD., Futian, Shenzhen, China

THIS DRAWING IS UNPUBLISHED. RELEASED FOR PUBLICATION 20
© COPYRIGHT 20 BY TYCO ELECTRONICS CORPORATION. ALL RIGHTS RESERVED.

LOC	DIST
FT	0

REVISIONS

P	LTR	DESCRIPTION	DATE	DWN	APVD
	A	RELEASED	-	-	-

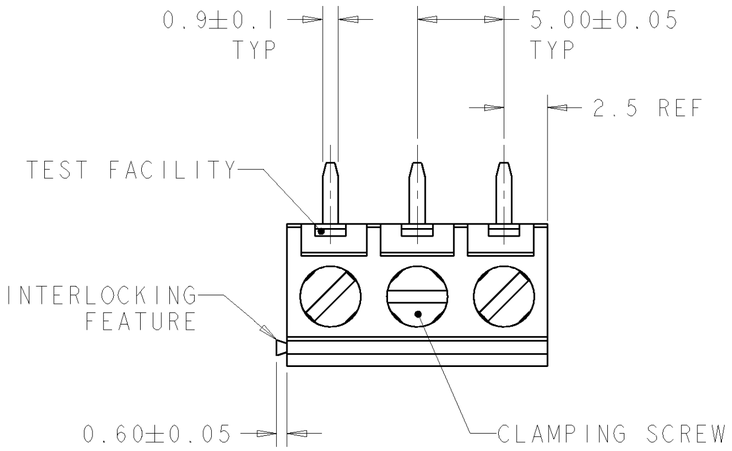

⚠1 MATERIALS AND FINISH
HOUSING: PA 6-6, UL 94-V0, COLOR: GRAY.
CLAMP: BRASS, NICKEL PLATED.
TERMINAL: BRASS, TIN PLATED.
CLAMPING SCREW: M3, BRASS, NICKEL PLATED.

2. SUITABLE FOR 1,6-2,4mm PC BOARD THICKNESS.

3. END-TO-END STACKABLE W/INTERLOCK WITHOUT LOSS OF CENTERLINE SPACING.

4. WIRE SIZE RANGE: 16-30 AWG.

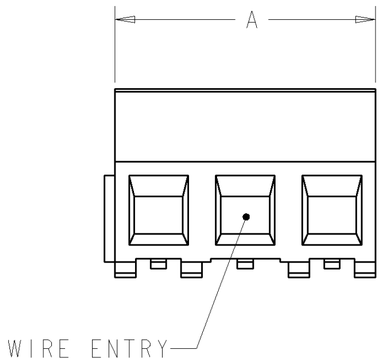

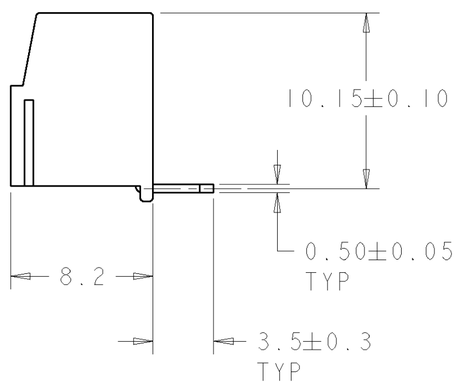

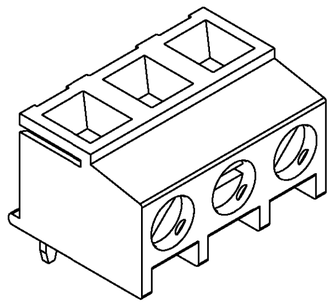

1546225-3 AS SHOWN

A	NO OF POSN	PART NUMBER
125.0	25	2-1546225-5
120.0	24	2-1546225-4
115.0	23	2-1546225-3
110.0	22	2-1546225-2
105.0	21	2-1546225-1
100.0	20	2-1546225-0
95.0	19	1-1546225-9
90.0	18	1-1546225-8
85.0	17	1-1546225-7
80.0	16	1-1546225-6
75.0	15	1-1546225-5
70.0	14	1-1546225-4
65.0	13	1-1546225-3
60.0	12	1-1546225-2
55.0	11	1-1546225-1
50.0	10	1-1546225-0
45.0	9	1546225-9
40.0	8	1546225-8
35.0	7	1546225-7
30.0	6	1546225-6
25.0	5	1546225-5
20.0	4	1546225-4
15.0	3	1546225-3
10.0	2	1546225-2

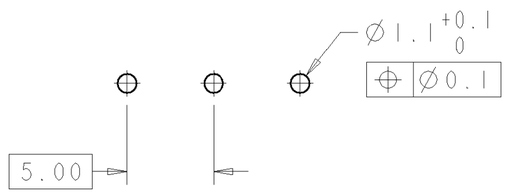

RECOMMENDED PC BOARD LAYOUT

THIS DRAWING IS A CONTROLLED DOCUMENT FOR TYCO ELECTRONICS CORPORATION. IT IS SUBJECT TO CHANGE AND THE CONTROLLING ENGINEERING ORGANIZATION SHOULD BE CONTACTED FOR THE LATEST REVISION.

DIMENSIONS: mm

TOLERANCES UNLESS OTHERWISE SPECIFIED:
0 PLC ±-
1 PLC ±.3
2 PLC ±.25
3 PLC ±-
4 PLC ±-
ANGLES ±2

MATERIAL ⚠1 -
FINISH ⚠1 -

DWN S.WELDON 10MAR2004
CHK C.RICHARD 10MAR2004
APVD C.RICHARD 10MAR2004
PRODUCT SPEC 108-20166
APPLICATION SPEC 114-20079
WEIGHT -

BUCHANAN
Tyco Electronics
Harrisburg, PA 17105-3608

NAME TERMINAL BLOCK, PCB MOUNT TOP ENTRY WIRE, STACKING W/INTERLOCK, 5.00mm PITCH

SIZE	CAGE CODE	DRAWING NO	RESTRICTED TO
A2	00779	C-1546225	-

CUSTOMER DRAWING | SCALE 4:1 | SHEET 1 OF 1 | REV A

AMP 1471-9 REV 31MAR2000

Pro/ENGINEER DRAWING