Chipsmall Limited consists of a professional team with an average of over 10 year of expertise in the distribution of electronic components. Based in Hongkong, we have already established firm and mutual-benefit business relationships with customers from,Europe,America and south Asia,supplying obsolete and hard-to-find components to meet their specific needs.

With the principle of “Quality Parts,Customers Priority,Honest Operation,and Considerate Service”,our business mainly focus on the distribution of electronic components. Line cards we deal with include Microchip,ALPS,ROHM,Xilinx,Pulse,ON,Everlight and Freescale. Main products comprise IC,Modules,Potentiometer,IC Socket,Relay,Connector.Our parts cover such applications as commercial,industrial, and automotives areas.

We are looking forward to setting up business relationship with you and hope to provide you with the best service and solution. Let us make a better world for our industry!

Contact us

Tel: +86-755-8981 8866 Fax: +86-755-8427 6832
Email & Skype: info@chipsmall.com Web: www.chipsmall.com
Address: A1208, Overseas Decoration Building, #122 Zhenhua RD., Futian, Shenzhen, China

NOTES:

1. MATERIALS AND FINISHES:
   BODY, COUPLING NUT & FERRULE - BRASS,NICKEL PLATING

2. MECHANICAL:
   A. DURABILITY: 500 CYCLES MIN.
   B. TEMPERATURE RANGE: -65°C TO +165°C

3. PACKAGING:
   A. QUANTITY: SINGLE PACK
   B. MARKING: BAG TO BE MARKED
      "AMPHENOL RF, 83-8SP-1006, AND DATE CODE"

4. CABLE ASSEMBLY INSTRUCTIONS:
   A. TRIM CABLE AS SHOWN.
   B. SLIDE FERRULE ONTO THE CABLE.
   C. INSERT CABLE INTO CONNECTOR.
   D. CRIMP WITH AMPHENOL TOOL 227-944 AND
      DANIELS DIE SET M22520/5-53 (0.454" HEX).

5 SHOWS CABLE ENTRY DIMENSIONS.

THIRD ANGLE PROJ.

REVISIONS				
REV	DESCRIPTION	DATE	ECO	APPR
--	RELEASE TO MFG.	--	--	--
B	REDRAWN IN PRO-E & COD ADDED	7/1/15	49810	KR

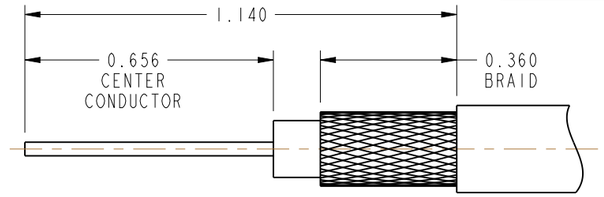

RECOMMENDED CABLE STRIPPING DIMENSIONS

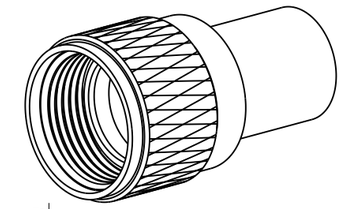

SCALE 1.500

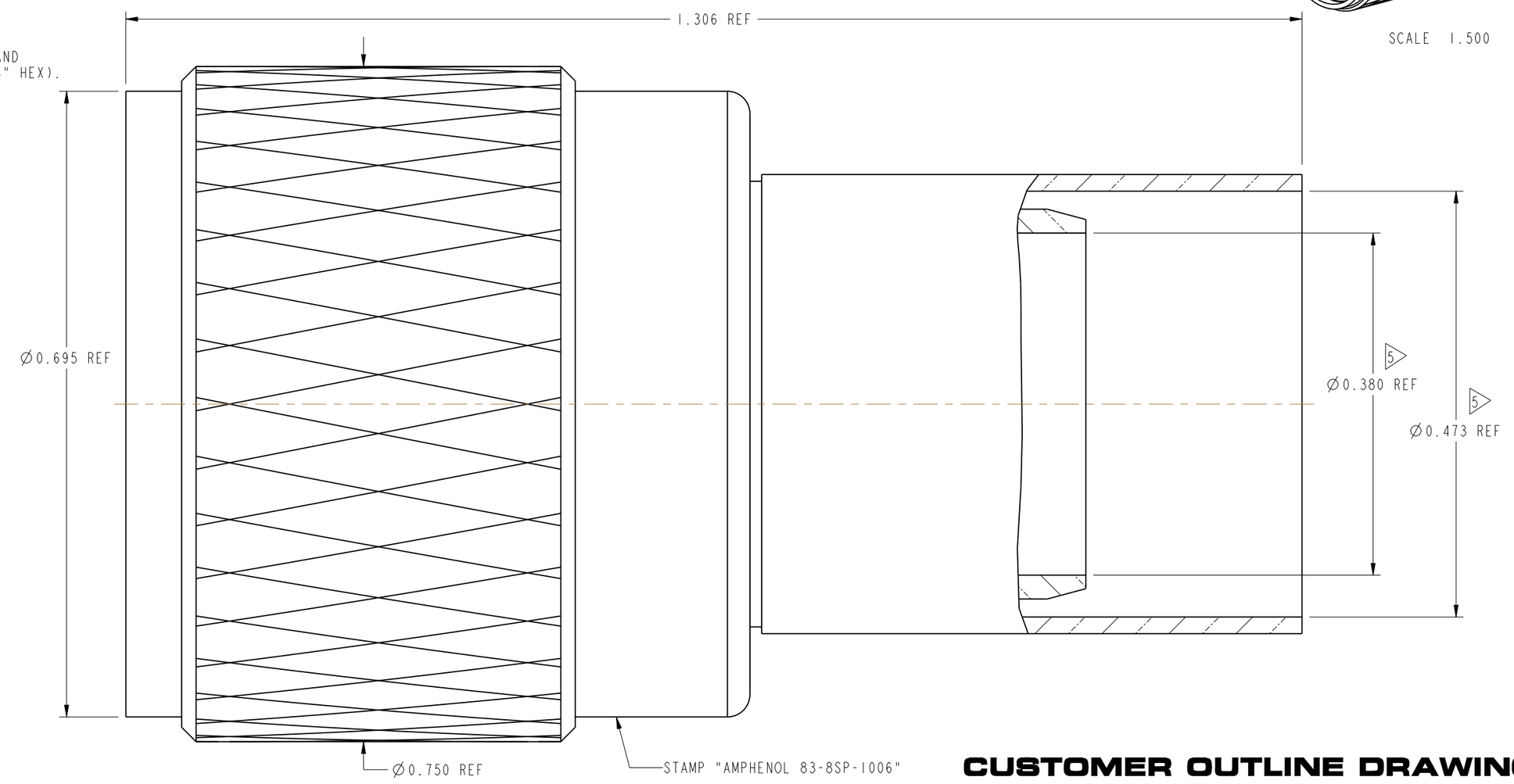

CUSTOMER OUTLINE DRAWING

ALL OTHER SHEETS ARE FOR INTERNAL USE ONLY

UNLESS OTHERWISE SPECIFIED, DIMENSIONS ARE IN INCHES AND TOLERANCES ARE:

2 PLACE DECIMAL	3 PLACE DECIMAL	ANGLES
±.015 (0,381 mm)	±.005 (0,127 mm)	± 1°

NOTICE - These drawings, specifications, or other data (1) are, and remain the property of Amphenol corp. (2) must be returned upon request; and (3) are confidential and not to be disclosed to any person other than those to whom they are given by Amphenol Corp. the furnishing of these drawings, specifications, or other data by Amphenol Corp., or to any other person to anyone for any purpose is not to be regarded by implication or otherwise in any manner licensing, granting rights to permitting such holder or any other person to manufacture, use or sell any product, process or design, patented or otherwise, that may in any way be related to or disclosed by said drawings, specifications, or other data.

MATERIAL
SEE NOTES

REFERENCE
EAR # 966655-0
611X-3730

CONFIGURATION LEVEL: In Work

FINISH

DRAWN KARTHIK R	DATE 04-Dec-13	
ENGINEER D. ROYCE	DATE 15-Aug-97	
APPROVED K. CAPOZZI	DATE 6/30/15	
CAD FILE		

TITLE
UHF STR PLUG
SHV 105714-147 CABLE

SCALE: 7.6:1.0 | SHEET 2 OF 2

DWG SIZE B | REV B

Amphenol RF
www.amphenolrf.com

DRAWING NO.83-8SP-1006
ITEM NO.83-8SP-1006
PART NO.83-8SP-1006