Chipsmall Limited consists of a professional team with an average of over 10 year of expertise in the distribution of electronic components. Based in Hongkong, we have already established firm and mutual-benefit business relationships with customers from,Europe,America and south Asia,supplying obsolete and hard-to-find components to meet their specific needs.

With the principle of “Quality Parts,Customers Priority,Honest Operation,and Considerate Service”,our business mainly focus on the distribution of electronic components. Line cards we deal with include Microchip,ALPS,ROHM,Xilinx,Pulse,ON,Everlight and Freescale. Main products comprise IC,Modules,Potentiometer,IC Socket,Relay,Connector.Our parts cover such applications as commercial,industrial, and automotives areas.

We are looking forward to setting up business relationship with you and hope to provide you with the best service and solution. Let us make a better world for our industry!

Contact us

Tel: +86-755-8981 8866 Fax: +86-755-8427 6832
Email & Skype: info@chipsmall.com Web: www.chipsmall.com
Address: A1208, Overseas Decoration Building, #122 Zhenhua RD., Futian, Shenzhen, China

used for: D-SUB COMBINATION

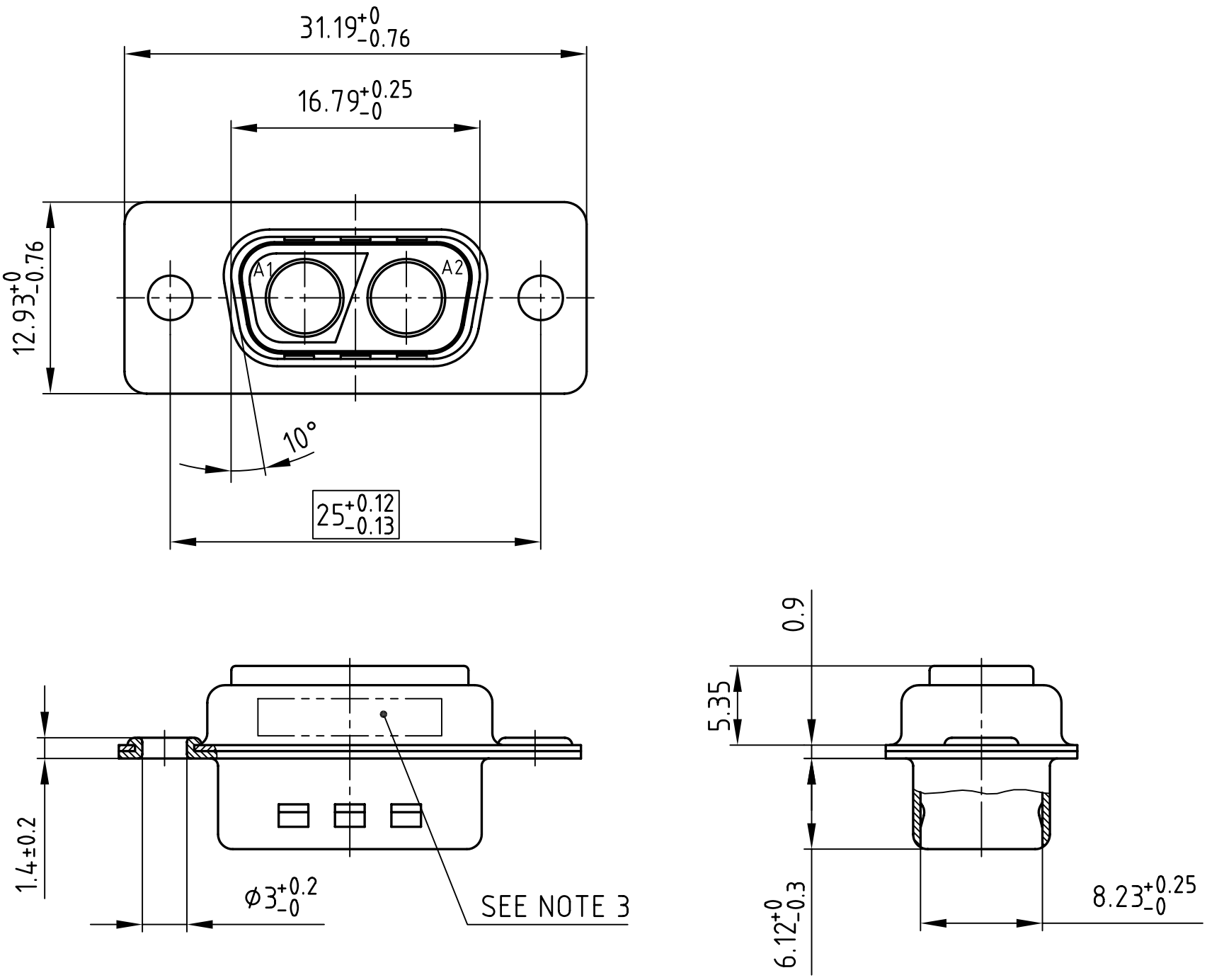

NOTES:

1. METALSHELLS: STEEL: TIN PLATED
2. INSULATOR: PBTP GF UL 94 V-0; GREEN
3. CONNECTOR IS PART MARKED: PART-NO. CONEC Y/WW
4. [ ] = CRITICAL DIMENSION

Directive 2002/95/EC „RoHS“ Compliant

THIS DRAWING MAY NOT BE COPIED OR REPRODUCED IN ANY WAY, AND MAY NOT BE PASSED ON TO A THIRD PARTY WITHOUT WRITTEN PERMISSION. OWNERSHIP AND COPYRIGHT OF CONEC GmbH

DO NOT ALTER CAD DRAWING BY HAND

rev.	description	date	name

tolerance

	date	name
1998		
drawn	16.10.	Barcinski
appd.	16.10.	Mickenbecker
norm		
d-old		

CONEC®

scale: 2:1

material: SEE NOTES

title: D-SUB COMBINATION MALE
2W2CP
WITHOUT CONTACTS

dwg no: 13K1IJ8A

AutoCAD/REL.13

DIN-A 4

sh: 1/1

part no: 302W2CPXX99A10X