Chipsmall Limited consists of a professional team with an average of over 10 year of expertise in the distribution of electronic components. Based in Hongkong, we have already established firm and mutual-benefit business relationships with customers from,Europe,America and south Asia,supplying obsolete and hard-to-find components to meet their specific needs.

With the principle of “Quality Parts,Customers Priority,Honest Operation,and Considerate Service”,our business mainly focus on the distribution of electronic components. Line cards we deal with include Microchip,ALPS,ROHM,Xilinx,Pulse,ON,Everlight and Freescale. Main products comprise IC,Modules,Potentiometer,IC Socket,Relay,Connector.Our parts cover such applications as commercial,industrial, and automotives areas.

We are looking forward to setting up business relationship with you and hope to provide you with the best service and solution. Let us make a better world for our industry!

Contact us

Tel: +86-755-8981 8866 Fax: +86-755-8427 6832
Email & Skype: info@chipsmall.com Web: www.chipsmall.com
Address: A1208, Overseas Decoration Building, #122 Zhenhua RD., Futian, Shenzhen, China

THIS DRAWING IS UNPUBLISHED. RELEASED FOR PUBLICATION - ,N/A .
© COPYRIGHT N/A By -2123 ALL RIGHTS RESERVED.

LOC	DIST
DF	A0

REVISIONS

P	LTR	DESCRIPTION	DATE	DWN	APVD
	B	REVISED PER ECO-13-002054	05FEB2013	MGM	CT

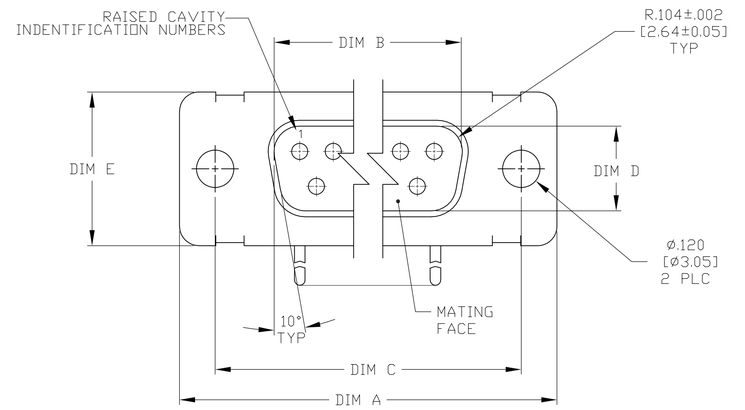

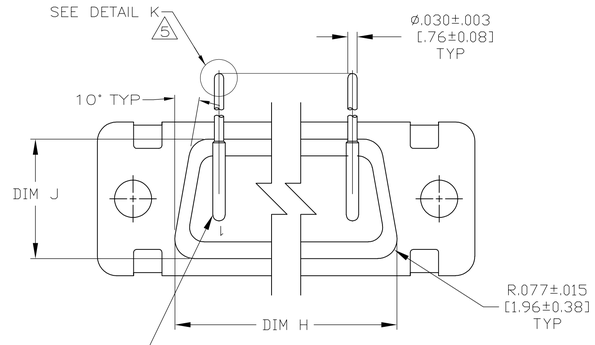

VIEW Z—Z
SHOWN WITH BRACKET REMOVED FOR CLARITY

CONTACT (QTY = NO. OF POSN)
MATL: BRASS PER ASTM-B-16, OR BERYLLIUM COPPER PER ASTM-B-194
FINISH: GOLD PER ASTM-B-488, TYPE II, GRADE C, CLASS 1.27 IN CONTACT MATING AREA, .000010 [0.0003] MIN THK GOLD PER ASTM-B-488 OVER .000050 [0.0013] MIN THK NICKEL PER SAE-AMS-QQ-N-290 ON CONTACT BODY

1. SEE SHEET 2 FOR RECOMMENDED P.C. BOARD LAYOUT. TRUE POSITION TOLERANCE FOR P.C.BOARD LAYOUT IS .010 [0.25] AT MAX MATERIAL CONDITION. SUGGESTED BOARD THICKNESS IS .062 [1.57]
2. THE CONNECTORS DESCRIBED IN THIS DOCUMENT MEET THE REQUIREMENTS OF MIL-C-24308 AND MATE WITH ANY RECEPTACLE CONNECTOR WITH SAME INSERT ARRANGEMENT.
3. MARKED WITH .047 [1.19]-.062 [1.57] HIGH CHARACTERS. FAR SIDE REFERS TO THE WIDE SIDE OF THE KEYSTONE. NEAR SIDE REFERS TO THE NARROW SIDE OF THE KEYSTONE. IF THE SHELL IS TOO SMALL FOR THE ENTIRE MARKING MARKING SHALL BE SPLIT AS FOLLOWS:
   A. "M24308" ON FRONT SHELL, FAR SIDE.
   B. SLASH SHEET AND DASH NUMBER ON REAR SHELL, FAR SIDE.
   C. "MFG'S" (NAME, BRAND OR LOGO) AND DATE CODE ON FRONT SHELL, NEAR SIDE.
   D. MFG'S PART NUMBER ON REAR SHELL, NEAR SIDE.
4. REQUIREMENT FOR FULL PIN DIAMETER EXTENSION: .159 [4.04] MIN, SHELL SIZES 1 AND 2. .150 [3.81] MIN, SHELL SIZES 3 AND 4.
5. SOLDER DIPPED PER J-STD-001 WITH Sn63 SOLDER PER J-STD-006 IN THE ENTIRE AREA OF DIMENSION SHOWN. (1757837-6 THRU -10 ONLY.)
6. MEETS SOLDERABLITY PER MIL-STD-202 METHOD 208.

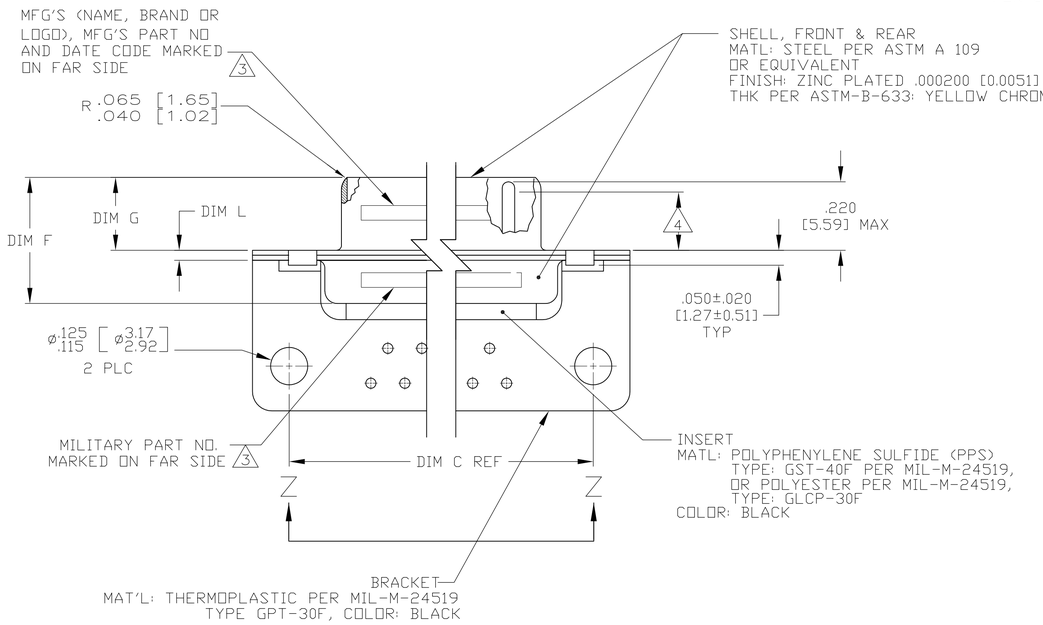

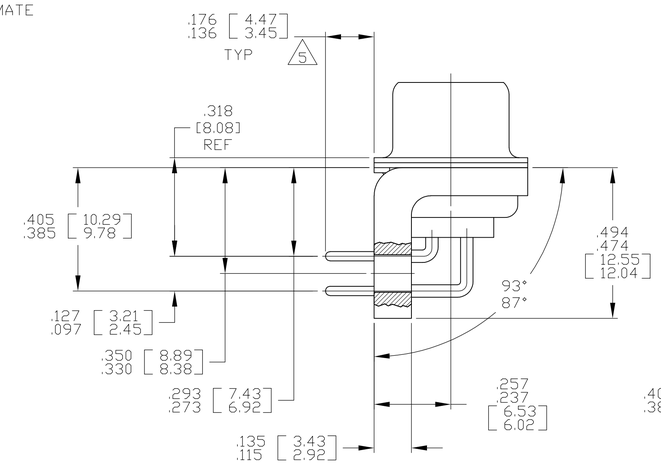

SHELL SIZES 1 THRU 4
CONTACT CONFIGURATION

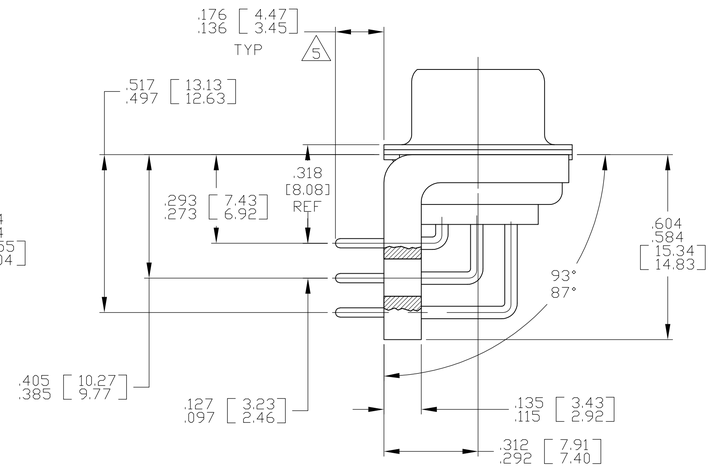

SHELL SIZE 5 CONTACT
CONFIGURATION

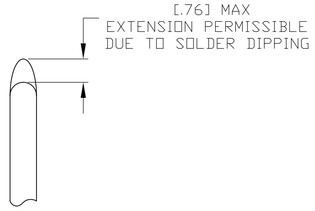

DETAIL K
SCALE 10:1
FOR 1757837-6 THRU -10 ONLY
5

DIM L	DIM J	DIM H	DIM G	DIM F	DIM E	DIM D	DIM C	DIM B	DIM A	INSERT ARRANGEMENT	NO OF POS	SHELL SIZE	MILITARY P/N ON CONNECTOR 3	MFG'S P/N MARKED ON CONNECTOR 3	MFG'S PART NO.
.049 .029 [1.24 0.74]	.544 .524 [13.82 13.31]	2.188 2.168 [55.58 55.07]	.236 .224 [5.99 5.69]	.436 .416 [11.07 10.57]	.620 .590 [15.75 14.99]	.446 .436 [11.33 11.07]	2.411 2.401 [61.24 60.99]	2.084 2.074 [52.55 52.30]	2.650 2.620 [67.31 66.55]	MS18277-1	50	5	M24308/24-35Z	1757837-5	1-1757837-0 5
.049 .029 [1.24 0.74]	.432 .412 [10.97 10.46]	2.282 2.262 [57.96 57.45]	.236 .224 [5.99 5.69]	.436 .416 [11.07 10.57]	.509 .479 [12.93 12.17]	.334 .324 [8.48 8.23]	2.505 2.495 [63.63 63.37]	2.187 2.177 [54.97 54.71]	2.744 2.714 [69.70 68.94]	MS18276-1	37	4	M24308/24-34Z	1757837-4	1757837-9 5
.049 .029 [1.24 0.74]	.432 .412 [10.97 10.46]	1.635 1.615 [41.53 41.02]	.236 .224 [5.99 5.69]	.436 .416 [11.07 10.57]	.509 .479 [12.93 12.17]	.334 .324 [8.48 8.23]	1.857 1.847 [47.17 46.91]	1.539 1.529 [38.51 38.25]	2.103 2.073 [53.42 52.65]	MS18275-1	25	3	M24308/24-33Z	1757837-3	1757837-8 5
.040 .020 [1.02 0.51]	.432 .412 [10.97 10.46]	1.093 1.073 [27.76 27.25]	.238 .229 [6.05 5.82]	.432 .412 [10.97 10.46]	.509 .479 [12.93 12.17]	.334 .324 [8.48 8.23]	1.317 1.307 [33.45 33.20]	.999 .989 [24.79 24.54]	1.556 1.526 [39.52 38.76]	MS18274-1	15	2	M24308/24-32Z	1757837-2	1757837-7 5
.040 .020 [1.02 0.51]	.432 .412 [10.97 10.46]	.769 .749 [19.53 19.02]	.238 .229 [6.05 5.82]	.432 .412 [10.97 10.46]	.509 .479 [12.93 12.17]	.334 .324 [8.48 8.23]	.989 .979 [25.12 24.87]	.671 .661 [16.46 16.21]	1.228 1.198 [31.19 30.43]	MS18273-1	9	1	M24308/24-31Z	1757837-1	1757837-6 5
.049 .029 [1.24 0.74]	.544 .524 [13.82 13.31]	2.188 2.168 [55.58 55.07]	.236 .224 [5.99 5.69]	.436 .416 [11.07 10.57]	.620 .590 [15.75 14.99]	.446 .436 [11.33 11.07]	2.411 2.401 [61.24 60.99]	2.084 2.074 [52.55 52.30]	2.650 2.620 [67.31 66.55]	MS18277-1	50	5	M24308/24-35Z	1757837-5	1757837-5
.049 .029 [1.24 0.74]	.432 .412 [10.97 10.46]	2.282 2.262 [57.96 57.45]	.236 .224 [5.99 5.69]	.436 .416 [11.07 10.57]	.509 .479 [12.93 12.17]	.334 .324 [8.48 8.23]	2.505 2.495 [63.63 63.37]	2.187 2.177 [54.97 54.71]	2.744 2.714 [69.70 68.94]	MS18276-1	37	4	M24308/24-34Z	1757837-4	1757837-4
.049 .029 [1.24 0.74]	.432 .412 [10.97 10.46]	1.635 1.615 [41.53 41.02]	.236 .224 [5.99 5.69]	.436 .416 [11.07 10.57]	.509 .479 [12.93 12.17]	.334 .324 [8.48 8.23]	1.857 1.847 [47.17 46.91]	1.539 1.529 [38.51 38.25]	2.103 2.073 [53.42 52.65]	MS18275-1	25	3	M24308/24-33Z	1757837-3	1757837-3
.040 .020 [1.02 0.51]	.432 .412 [10.97 10.46]	1.093 1.073 [27.76 27.25]	.238 .229 [6.05 5.82]	.432 .412 [10.97 10.46]	.509 .479 [12.93 12.17]	.334 .324 [8.48 8.23]	1.317 1.307 [33.45 33.20]	.999 .989 [24.79 24.54]	1.556 1.526 [39.52 38.76]	MS18274-1	15	2	M24308/24-32Z	1757837-2	1757837-2
.040 .020 [1.02 0.51]	.432 .412 [10.97 10.46]	.769 .749 [19.53 19.02]	.238 .229 [6.05 5.82]	.432 .412 [10.97 10.46]	.509 .479 [12.93 12.17]	.334 .324 [8.48 8.23]	.989 .979 [25.12 24.87]	.671 .661 [16.46 16.21]	1.228 1.198 [31.19 30.43]	MS18273-1	9	1	M24308/24-31Z	1757837-1	1757837-1

THIS DRAWING IS A CONTROLLED DOCUMENT.

DIMENSIONS: INCHES

TOLERANCES UNLESS OTHERWISE SPECIFIED:
0 PLC ± –
1 PLC ± –
2 PLC ± –
3 PLC ± .005 [0.13]
4 PLC ± –
ANGLES ± 1°

MATERIAL: SEE CALLOUTS
FINISH: SEE CALLOUTS

DWN C.C.THOMAS 2-23-06
CHK D.MILLER 2-23-06
APVD D.MILLER 2-23-06
PRODUCT SPEC —
APPLICATION SPEC —
WEIGHT —

TE Connectivity

NAME: PLUG ASSEMBLY,AMPLIMITE,RT ANGLE, SERIES 109,SIZE 1 THRU 5

SIZE	CAGE CODE	DRAWING NO	RESTRICTED TO
A1	00779	C-1757837	—

CUSTOMER DRAWING | SCALE 4:1 | SHEET 1 OF 2 | REV B

4805 (3/11)

THIS DRAWING IS UNPUBLISHED. RELEASED FOR PUBLICATION -,- .
© COPYRIGHT - By -2123 ALL RIGHTS RESERVED.

LOC	DIST
DF	DO

REVISIONS

P	LTR	DESCRIPTION	DATE	DWN	APVD
	-	SEE SHEET 1	-	-	-

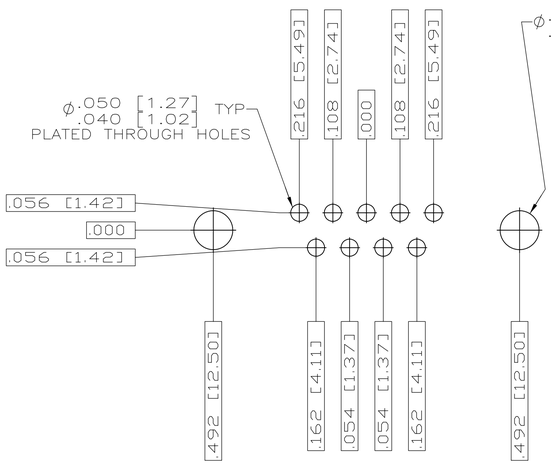

RECOMMENDED P.C. BOARD LAYOUT
SHELL SIZE 1 (9 POSITION) 1

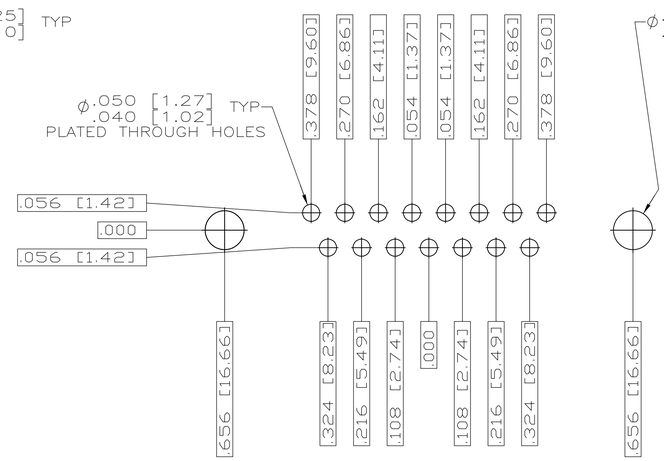

RECOMMENDED P.C. BOARD LAYOUT
SHELL SIZE 2 (15 POSITION) 1

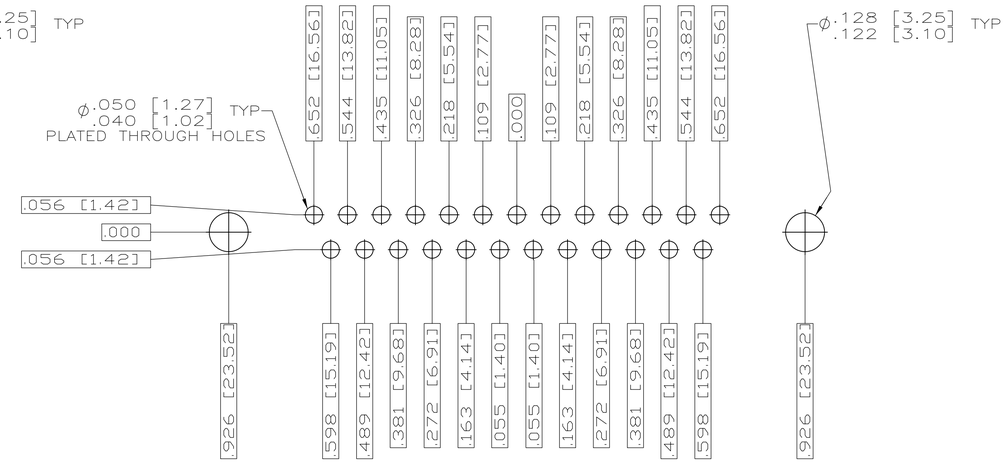

RECOMMENDED P.C. BOARD LAYOUT
SHELL SIZE 3 (25 POSITION) 1

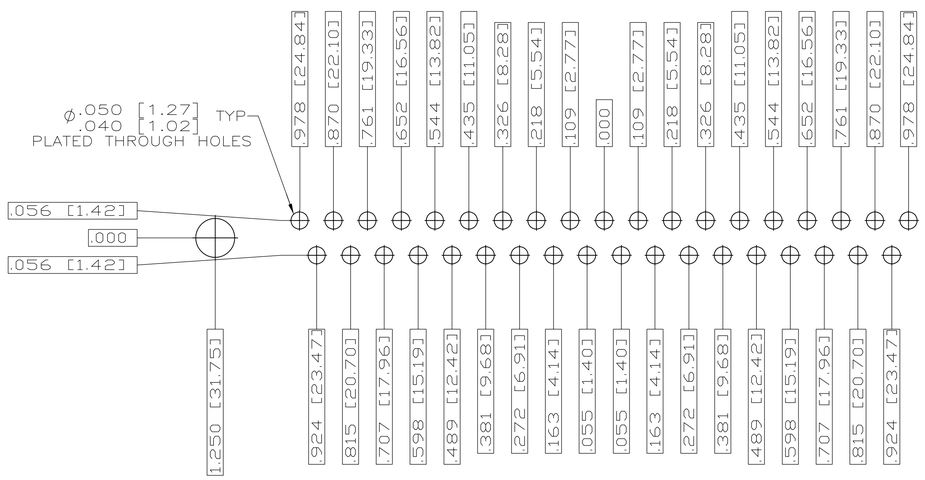

RECOMMENDED P.C. BOARD LAYOUT
SHELL SIZE 4 (37 POSITION) 1

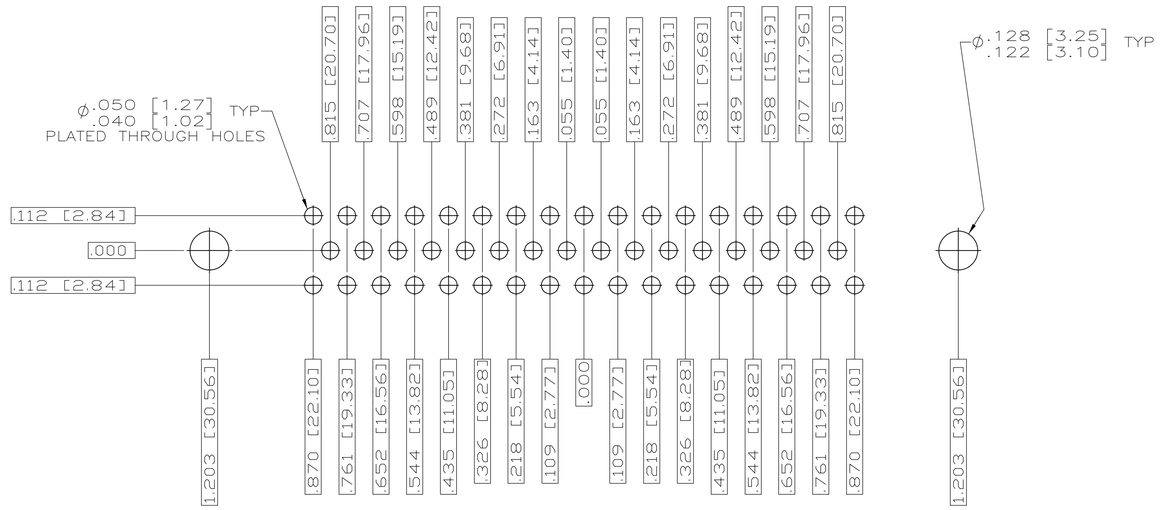

RECOMMENDED P.C. BOARD LAYOUT
SHELL SIZE 5 (50 POSITION) 1

THIS DRAWING IS A CONTROLLED DOCUMENT.

DIMENSIONS: INCHES

TOLERANCES UNLESS OTHERWISE SPECIFIED:
0 PLC ± -
1 PLC ± -
2 PLC ± -
3 PLC ± -
4 PLC ± -
ANGLES ± 1°

MATERIAL: SEE CALLOUTS
FINISH: SEE CALLOUTS

DWN C.C.THOMAS 2-23-06
CHK D.HOFFMAN 2-23-06
APVD D.MILLER 2-23-06
PRODUCT SPEC —
APPLICATION SPEC —
WEIGHT —

TE Connectivity

NAME: PLUG ASSY,AMPLIMITE RIGHT ANGLE,SERIES 109,SIZE 1 THRU 5

SIZE	CAGE CODE	DRAWING NO	RESTRICTED TO
A1	00779	C-1757837	—

CUSTOMER DRAWING | SCALE 4:1 | SHEET 2 OF 2 | REV B

4805 (3/11)