Chipsmall Limited consists of a professional team with an average of over 10 year of expertise in the distribution of electronic components. Based in Hongkong, we have already established firm and mutual-benefit business relationships with customers from,Europe,America and south Asia,supplying obsolete and hard-to-find components to meet their specific needs.

With the principle of “Quality Parts,Customers Priority,Honest Operation,and Considerate Service”,our business mainly focus on the distribution of electronic components. Line cards we deal with include Microchip,ALPS,ROHM,Xilinx,Pulse,ON,Everlight and Freescale. Main products comprise IC,Modules,Potentiometer,IC Socket,Relay,Connector.Our parts cover such applications as commercial,industrial, and automotives areas.

We are looking forward to setting up business relationship with you and hope to provide you with the best service and solution. Let us make a better world for our industry!

Contact us

Tel: +86-755-8981 8866 Fax: +86-755-8427 6832
Email & Skype: info@chipsmall.com Web: www.chipsmall.com
Address: A1208, Overseas Decoration Building, #122 Zhenhua RD., Futian, Shenzhen, China

版数 REV.	年月日 DATE	DCN NO.	変更内容 DESCRIPTION	製図 DR.	担当 CHK.	査閲 APPD.	承認 APPD.

図面番号(DRAWING NO.) SJ100366

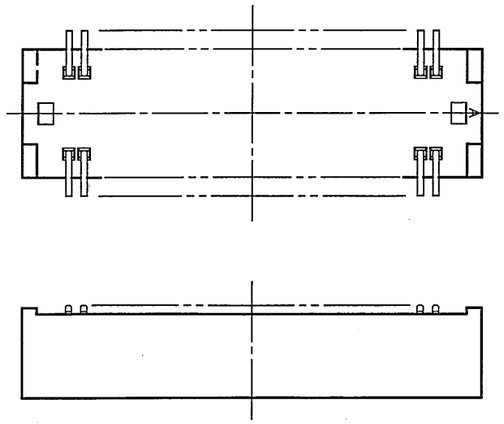

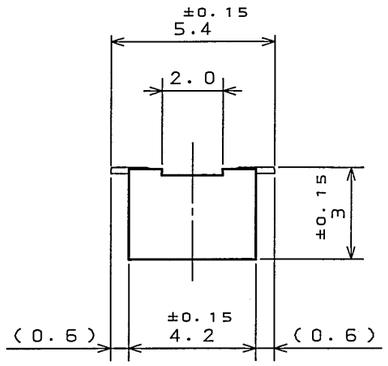

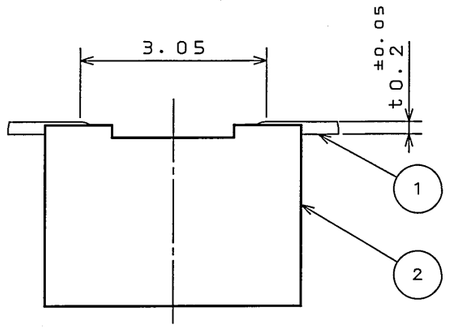

(SCALE 10:1)

TABLE 1

NO. OF CONTACTS	A	B	C
30	7.0	9.0	10.0
40	9.5	11.5	12.5
50	12.0	14.0	15.0
60	14.5	16.5	17.5
80	19.5	21.5	22.5
100	24.5	26.5	27.5

TABLE 2

FINISH	CONTACT AREA	TERMINAL AREA
1	GOLD(0.1μm MIN) OVER NICKEL	GOLD FLASH OVER NICKEL

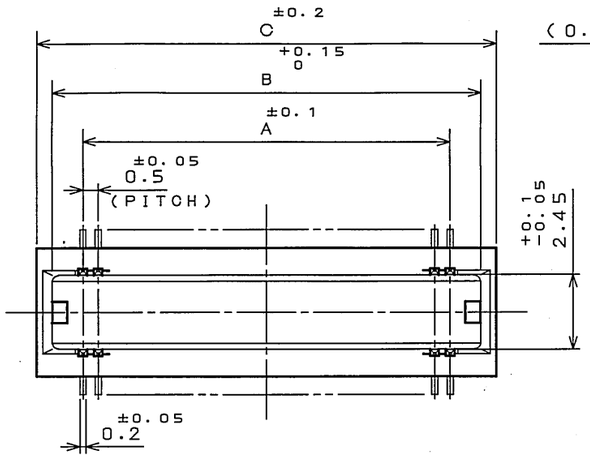

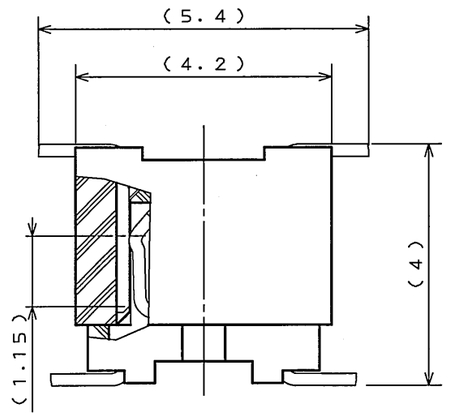

MATED CONDITION(REF.)

NOTE 1. THIS CONNECTOR HAS A FRICTION LOCK TYPE.
2. COPLANARITY IS AS PER APPLICABLE SPECIFICATION.

注1. 本コネクタは、フリクションロック仕様である。
2. 端子の振れ規定は適用仕様書による。

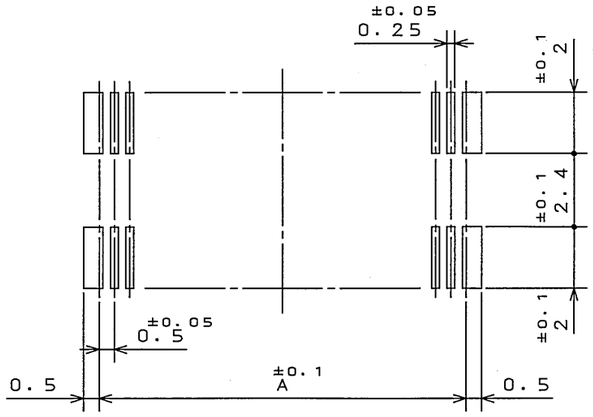

APPLICABLE P.C.B. DIMENSION(REF.)
(CONNECTOR MOUNTING SIDE)

符号 NO.	名称 DESCRIPTION	個数 QTY.	材料 MATERIAL	仕上 FINISH	備考 REMARKS
2	INSULATOR	1	GLASS FILLED PPS	――	COLOR:BEIGE UL94V-0
1	CONTACT	N	PHOSPHOR BRONZE	TABLE 2	

仕様書(SPECIFICATION) JACS-1385-*

第1版(ORIGINAL DATE) 4.Dec.2003

製図 DR. S.MIURA
担当 CHK. T.SHIODA
査閲 APPD. K.Kawase
承認 APPD. S.Kashiwagi

尺度(SCALE) 5:1 シリーズ(SERIES) WR

名称(TITLE) WR-L*P-VF-N1

重量(WEIGHT)

一般公差(GENERAL TOLERANCE)

寸法(DIMENSION)	角度(ANGLES)
. ±0.8	X° ±
.X ±0.4	X°X' ±
.XX ±0.1	
.XXX ±	

日本航空電子工業株式会社
JAPAN AVIATION ELECTRONICS INDUSTRY, LTD.

図面番号(DRAWING NO.) SJ100366

版数(REV.) 1

SIZE A3

JAE-CONNECTOR.COM
Reference Only

DOF-0-212E(03.08)

0 10 20 30 40 50 60 70 80 90 100

LEAD FREE この製品は鉛フリー品です

JAE CONNECTOR DIV. PROPRIETARY.
COPYRIGHT (C) 2003, JAPAN AVIATION ELECTRONICS INDUSTRY, LTD.