Chipsmall Limited consists of a professional team with an average of over 10 year of expertise in the distribution of electronic components. Based in Hongkong, we have already established firm and mutual-benefit business relationships with customers from,Europe,America and south Asia,supplying obsolete and hard-to-find components to meet their specific needs.

With the principle of “Quality Parts,Customers Priority,Honest Operation,and Considerate Service”,our business mainly focus on the distribution of electronic components. Line cards we deal with include Microchip,ALPS,ROHM,Xilinx,Pulse,ON,Everlight and Freescale. Main products comprise IC,Modules,Potentiometer,IC Socket,Relay,Connector.Our parts cover such applications as commercial,industrial, and automotives areas.

We are looking forward to setting up business relationship with you and hope to provide you with the best service and solution. Let us make a better world for our industry!

Contact us

Tel: +86-755-8981 8866 Fax: +86-755-8427 6832
Email & Skype: info@chipsmall.com Web: www.chipsmall.com
Address: A1208, Overseas Decoration Building, #122 Zhenhua RD., Futian, Shenzhen, China

SHEET OF

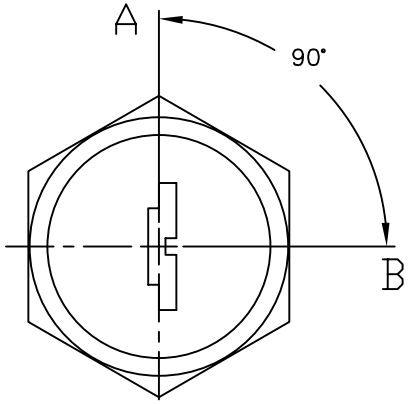

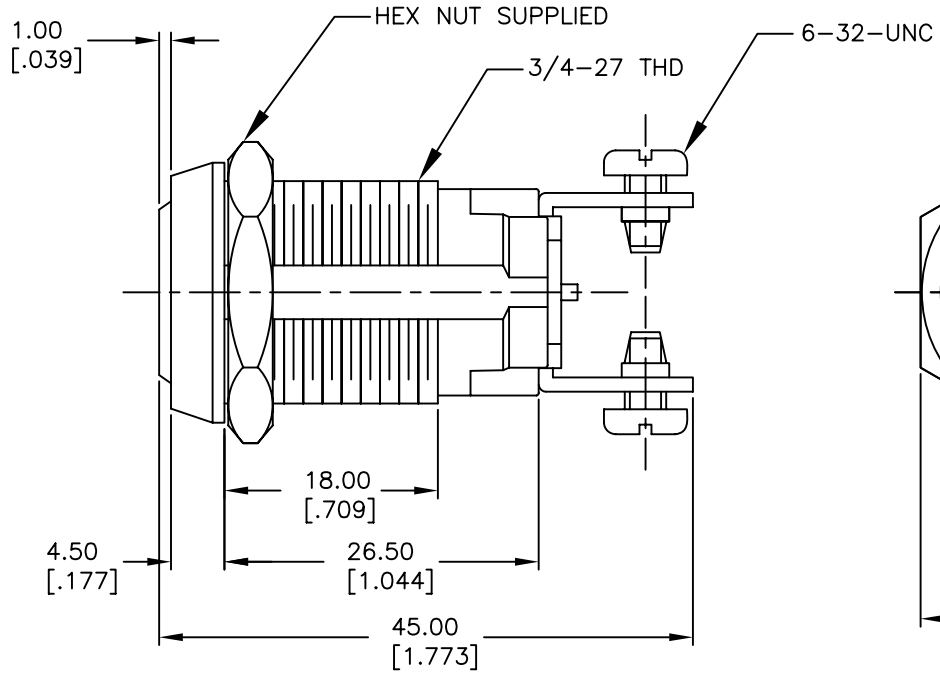

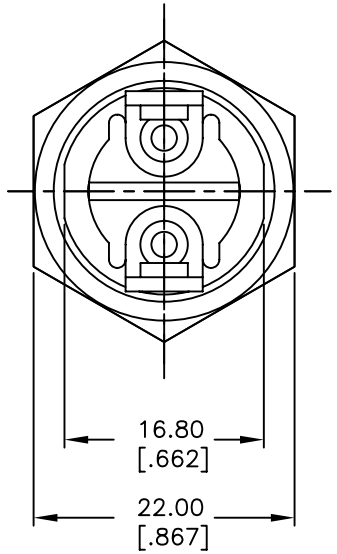

NOTES:

1. ALL DIMENSIONS IN MM [INCH]
2. GENERAL TOLERANCE: X.X=±0.4
   X.XX=±0.25
3. TERM. NOS. FOR REFERENCE ONLY.
4. RATING: 4A @125VAC, 2A @250VAC
5. CONTACT RESISTANCE: 10mILLI-OHMS
6. DIELECTRIC STRENGTH: 1500 VAC-1Minute
7. INSULATION RESISTANCE: 200 Mega-OHMS
8. MATERIALS:
   HOUSING: ZINC ALLOY DIE CAST
   CYLINDER: ZINC ALLOY W/CHROME PLATE
   CONTACTS: SILVER PLATE
   CRISS CROSS TUMBLERS. (11 BLADE)
   DOUBLE BITTED KEYS (2) STAMPED 2007
9. KEYLOCK, KEYS, AND HEX NUT YO BE PACKED TOGETHER IN INDIVIDUAL BAGS.

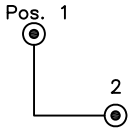

CIRCUIT: SPST
CONTACT CONFIGURATION

SWITCH FUNCTION	
POS 1	POS 2
↑	→
OFF	ON

LEGEND

● = INDICATE NO KEY PULL

⊙ = INDICATES KEY PULL POSSIBLE

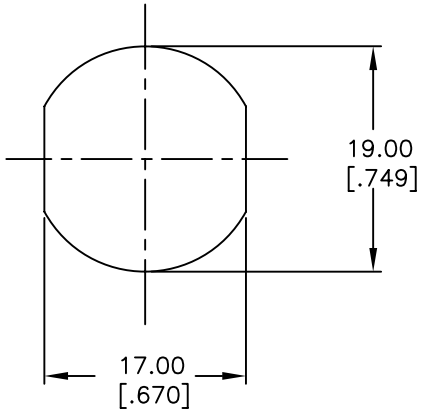

RECOMMENDED PANEL CUTOUT

REV.	ECN No.	DESCRIPTION	DATE	CHKD
C	18008	ADD NOTE 9	3/12/08	RC
B	12872	REMOVE TERM /NOTE 8	3/4/03	CJB
A	11754	RELEASED FOR PRODUCTION	10/17/01	CJB

THE INFORMATION CONTAINED IN THIS DOCUMENT IS PROPRIETARY TO E-SWITCH AND IS NOT TO BE COPIED OR TRANSFERRED

E-SWITCH®

TITLE K0128B-2007

SCALE	DATE	DR	DWG	REV
1.5:1	10/17/01	CJB	K200202	C