Chipsmall Limited consists of a professional team with an average of over 10 year of expertise in the distribution of electronic components. Based in Hongkong, we have already established firm and mutual-benefit business relationships with customers from,Europe,America and south Asia,supplying obsolete and hard-to-find components to meet their specific needs.

With the principle of “Quality Parts,Customers Priority,Honest Operation,and Considerate Service”,our business mainly focus on the distribution of electronic components. Line cards we deal with include Microchip,ALPS,ROHM,Xilinx,Pulse,ON,Everlight and Freescale. Main products comprise IC,Modules,Potentiometer,IC Socket,Relay,Connector.Our parts cover such applications as commercial,industrial, and automotives areas.

We are looking forward to setting up business relationship with you and hope to provide you with the best service and solution. Let us make a better world for our industry!

Contact us

Tel: +86-755-8981 8866 Fax: +86-755-8427 6832
Email & Skype: info@chipsmall.com Web: www.chipsmall.com
Address: A1208, Overseas Decoration Building, #122 Zhenhua RD., Futian, Shenzhen, China

NUMBER 316133

3rd ANGLE PROJECTION

METRIC

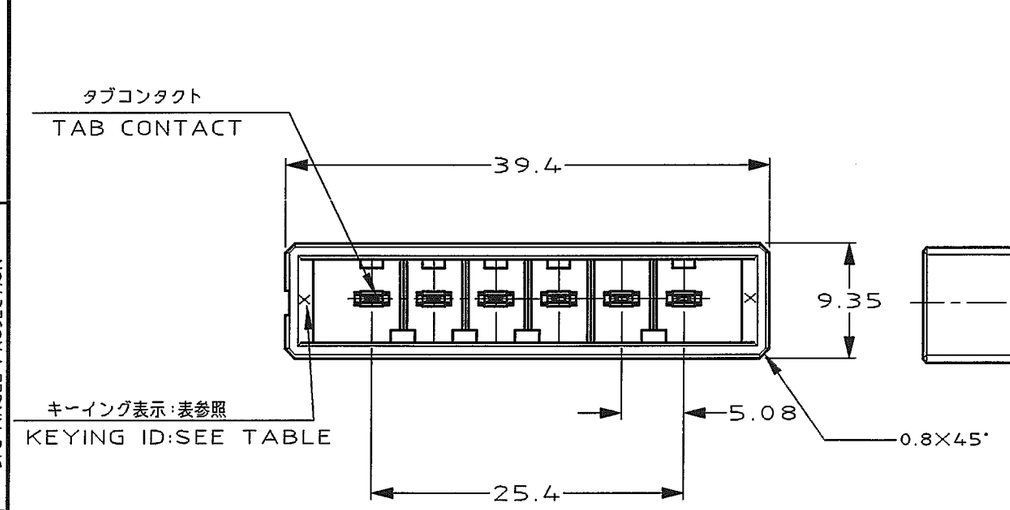

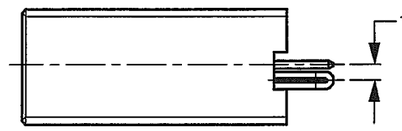

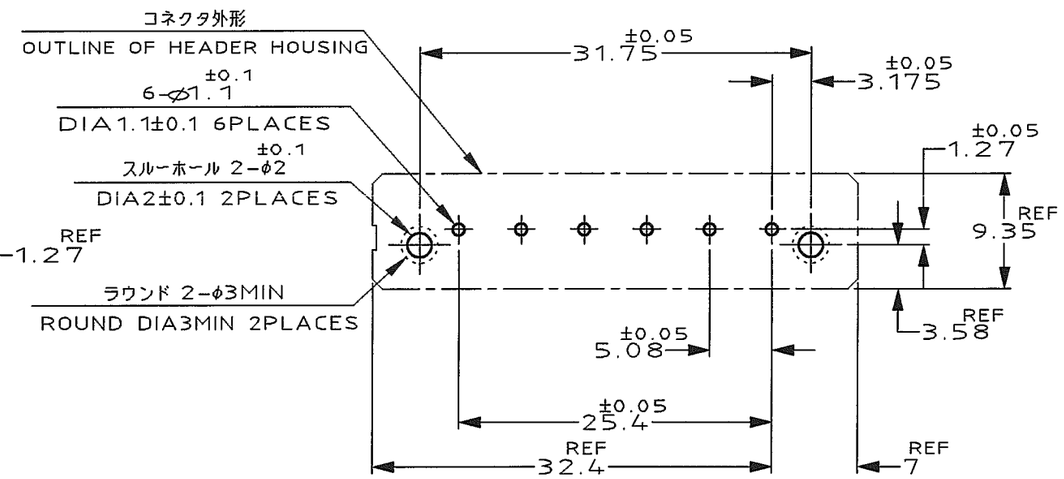

推奨基板取付け穴寸法

PC 基板厚:1.6±0.1
(非累積公差)
(コネクタ搭載面)

RECOMEND PC BOARD HOLE PATTERN

PC BOARD THICKNESS:1.6±0.1
(NOT ACCUMULATE TOLERANCE)
(CONNECTOR MOUNT SIDE)

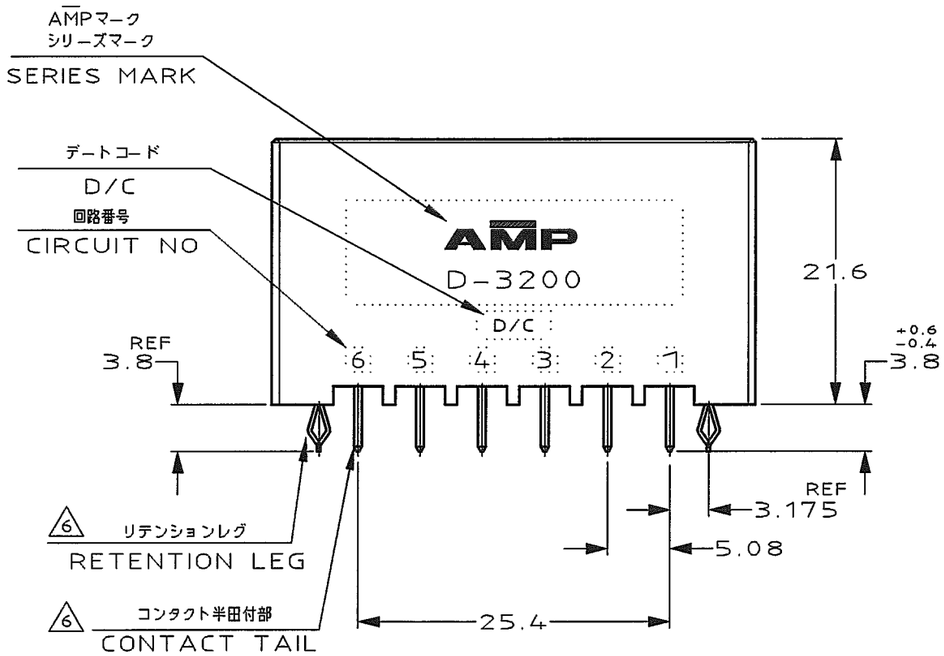

7 OBSOLETE PARTS: OBSOLETE CIS STREAMLINING PER D.RENAUD/D.SINISI

NOTES

1. MATERIAL:HOUSING:GLASS FILED THERMO PLASTIC,POLYESTER(94V-0),COLOR:BLACK
CONTACT:COPPER ALLOY
RETENTION LEG:COPPER ALLOY
2. FINISH(CONTACT AREA):0.38μmMIN GOLD PLATING OVER Ni PLATING
3. FINISH(CONTACT AREA):0.76μmMIN GOLD PLATING OVER Ni PLATING
4. FINISH(CONTACT AREA):2.0 μmMIN TIN PLATED OVER NICKEL
~~5. FINISH(RETENTION LEG): TIN-LEAD PLATED (CONTACT TAIL) OVER NICKEL~~
6. FINISH(RETENTION LEG): TIN PLATED (CONTACT TAIL) OVER NICKEL

注 記

1. 材料: ハウジング: ガラス入り熱可塑性
ポリエステル樹脂 (94V-0),色: 黒
コンタクト: 銅合金
リテンションレグ: 銅合金
2. めっき: コンタクト: 全面Ni下地
接触部:0.38μm MIN金めっき
3. めっき: コンタクト: 全面Ni下地
接触部:0.76μm MIN金めっき
4. めっき: コンタクト: 全面Ni下地
接触部:2.0 μm MINスズめっき
~~5. めっき: リテンションレグとコンタクト半田付部 : ニッケル下地の上に半田めっき~~
6. めっき: リテンションレグとコンタクト半田付部
: ニッケル下地の上にスズめっき

7 OBSOLETE

キーイング位置 KEYING LOCATION	キーイング KEYING	FINISH		製品番号 PART NO.
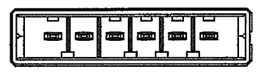	Y	6	4	~~2-316133-5~~
		6	3	2-316133-3
		6	2	2-316133-2
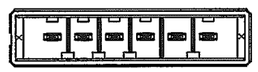	X	6	4	1-316133-5
		6	3	1-316133-3
		6	2	1-316133-2

Copyright © 1995
AMP(Japan) LTD.
ALL RIGHTS RESERVED.

tyco Electronics
Tyco Electoronics AMP K.K
Kawasaki,Japan

LTR	REVISION RECORD	DR	CHK	DATE
B1	REV PER ECO-10-000445	KK	AEG	11JAN 10
B	REVISED (FJD0-0039-03)	TS	SM	6/2 '03
A	REVISED (FJD0-0114-03)	TS	SM	25.APR '03
0	RELEASED (FJ00-2557-95)	KI	YI	2/AUG '95

WIRE RANGE mm²(AWG -) | INSULATION DIA - mmφ
MATERIAL SEE NOTES 注記参照 | FINISH SEE NOTES 注記参照
DR. 26/JUL/'95 K.IKEDA | DE. 26/JUL/'95 K.IKEDA
CHK. 2/AUG/'95 Y.ISHIKAWA | APP. 2/AUG/'95 S.MANABE

NAME ダイナミック D-3200S 5.08 ピッチ (V) 6極 ヘッダーアセンブリー
DYNAMIC D-3200S 5.08PITCH(V) 6 POS.HDR CONN.ASS'Y

一般公差 (GENERAL TOLERANCE)
10以下 : ±0.3
10を超え 30以下 : ±0.4
30を超え100以下 : ±0.45
角度 : ±3°

SIZE	LOC	NUMBER
A3	J	C-316133

SCALE	REV.	SHEET
2-1	B1	1 OF 1

DIMENSIONS IN MILLIMETERS. DO NOT SCALE PRINT

PRINT DIST

AMP-J
REV.10/'83

(CUSTOMER DRAWING) 顧客用図面