SERIES 328 • .100" GRID HORIZONTAL SURFACE MOUNT HEADER WITH REMOVEABLE INSULATOR • SINGLE ROW STRIPS

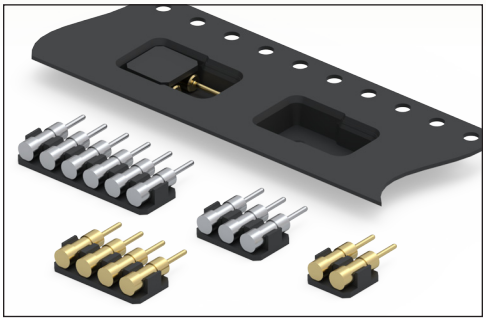

- Horizontal surface mount headers with removeable insulator for minimal profile connections
- Ideal for daisy chaining of P.C.B.'s when mated with horizontal surface mount socket series 835-XX-0XX-40-030001
- Series 328 single row .100" grid headers use MM #2820 pins. See page 207 for details
- High temperature thermoplastic insulators are suitable for surface mount soldering processes
- The 328 series are packaged on tape & reel - 16, 24, 32 or 44 mm wide x 16 mm pitch, making them simple to integrate into existing pick & place equipment and assembly processes. The tape packaging is per EIA-481-D

Series 328 Single Row

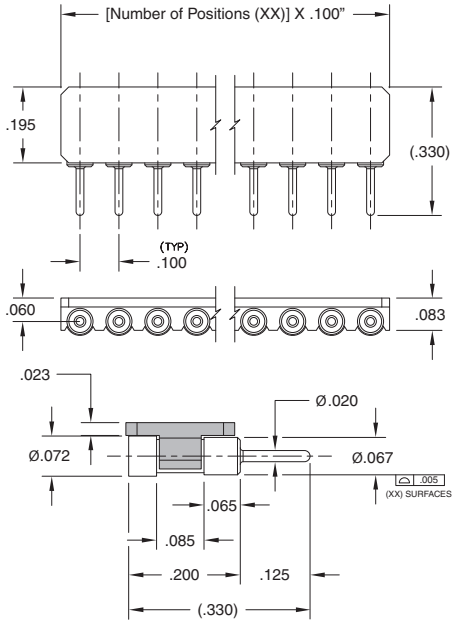

Series 328 (Tape Pocket Details)

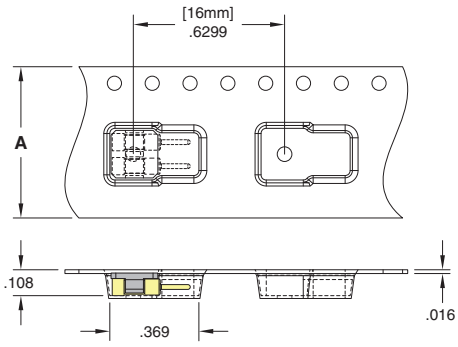

ORDERING INFORMATION

Series 328 (Tape & Reel Packaged)

328-XX-1XX-40-020001

Specify number of contacts 02-10

Number of Contacts	Tape Width Size (A)	Quantity per Reel
2	16mm	1,450
3	16mm	1,450
4	24mm	1,450
5	24mm	1,450
6	24mm	1,450
7	32mm	1,450
8	32mm	1,450
9	44mm	1,450
10	44mm	1,450

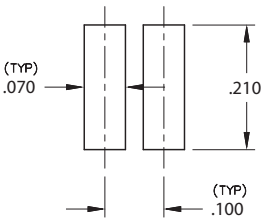

Suggested P.C.B. Footprint

RoHS-2 2011/65/EU

XX=Plating Code See Below

For Electrical, Mechanical & Enviromental Data, See page 264

SPECIFY PLATING CODE XX=	10 ◆		40 ◆	
Pin Plating	10 µ" Au		200 µ" Sn	