Chipsmall Limited consists of a professional team with an average of over 10 year of expertise in the distribution of electronic components. Based in Hongkong, we have already established firm and mutual-benefit business relationships with customers from,Europe,America and south Asia,supplying obsolete and hard-to-find components to meet their specific needs.

With the principle of “Quality Parts,Customers Priority,Honest Operation,and Considerate Service”,our business mainly focus on the distribution of electronic components. Line cards we deal with include Microchip,ALPS,ROHM,Xilinx,Pulse,ON,Everlight and Freescale. Main products comprise IC,Modules,Potentiometer,IC Socket,Relay,Connector.Our parts cover such applications as commercial,industrial, and automotives areas.

We are looking forward to setting up business relationship with you and hope to provide you with the best service and solution. Let us make a better world for our industry!

Contact us

Tel: +86-755-8981 8866 Fax: +86-755-8427 6832
Email & Skype: info@chipsmall.com Web: www.chipsmall.com
Address: A1208, Overseas Decoration Building, #122 Zhenhua RD., Futian, Shenzhen, China

REV.	DATE	DESCRIPTION
A	02/06/00	UPDATE DIMENSIONS – ADD SLEEVE
B	11/25/03	UPDATE DIMENSIONS

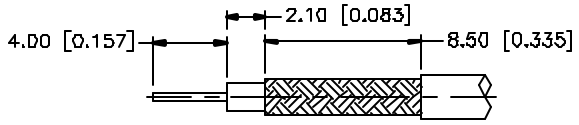

RECOMMENDED
CABLE STRIPPING DIM'S

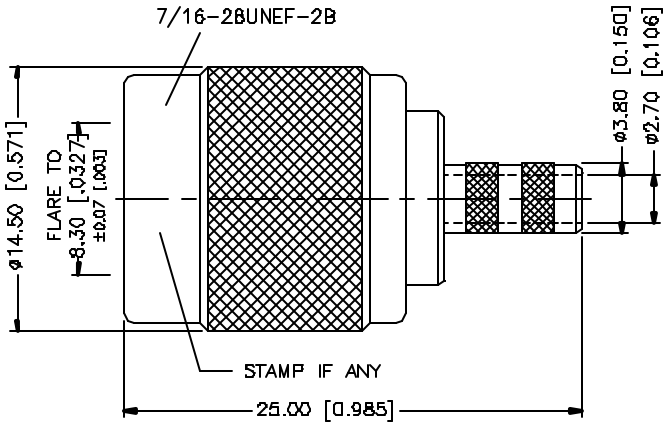

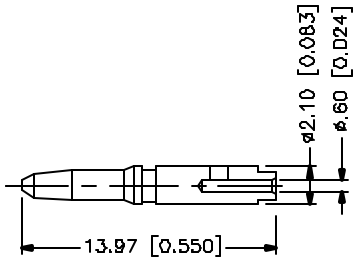

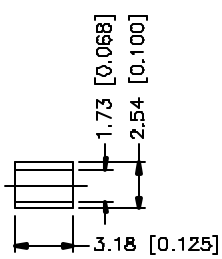

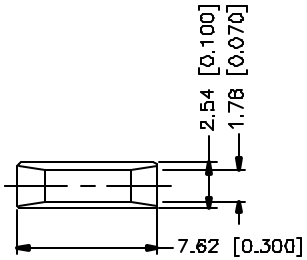

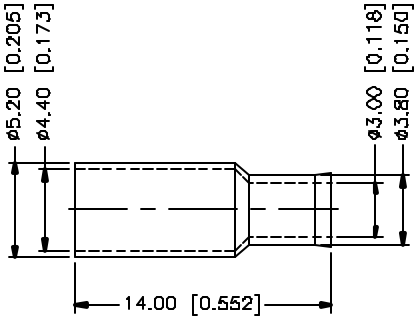

CRIMP NOTES:

1. CRIMPED FERRULE
   HEX SIZE .178"
2. CRIMPED CONTACT PIN
   HEX CRIMP SIZE .068"
3. VSWR 1.6 MAX. UP TO 3 Ghz

	DESCRIPTION	MATERIAL	FINISH	QTY
8				
7	FERRULE	BRASS	NICKEL	1
6	SPACER	BRASS	NICKEL	1
5	SLEEVE	TEFLON	NATURAL	1
4	RETAINER RING	BRASS	NICKEL	1
3	INSULATOR	TEFLON	NATURAL	1
2	CONTACT PIN	BRASS	GOLD	1
1	SHELL/BODY	BRASS	NICKEL	1

UNLESS OTHERWISE SPECIFIED DIMENSIONS ARE IN MILLIMETERS. DIMENSIONS IN [ ] ARE IN INCHES AND FOR CUSTOMER REFERENCE ONLY.

UNLESS OTHERWISE SPECIFIED TOLERANCES FOR MILLIMETERS ARE:
0.5 – 8mm ± 0.20mm
8 – 30mm ± 0.40mm
30 – 120mm ± 0.50mm

UNLESS OTHERWISE SPECIFIED TOLERANCES FOR INCHES ARE:
.020 – .315 = ± 0.007"
.315 – 1.180 = ± 0.015"
1.180 – 4.724 = ± 0.020"

DO NOT SCALE DRAWING

APPROVALS		DATE
DRAWN	G.R.S.	11/25/03
CHECKED		
ISSUED		
SHEET	1 OF 1	
CAD FILE	C:/122/122116.DWG	

Amphenol Connex

PART DESCRIPTION
TNC CRIMP PLUG
(FOR RG-174/U, 188A/U, 316/U CABLE)

PART NO. 122116

DWG. NO.	REV.	SIZE	SCALE
122116.DWG	B	A	NA