Chipsmall Limited consists of a professional team with an average of over 10 year of expertise in the distribution of electronic components. Based in Hongkong, we have already established firm and mutual-benefit business relationships with customers from,Europe,America and south Asia,supplying obsolete and hard-to-find components to meet their specific needs.

With the principle of “Quality Parts,Customers Priority,Honest Operation,and Considerate Service”,our business mainly focus on the distribution of electronic components. Line cards we deal with include Microchip,ALPS,ROHM,Xilinx,Pulse,ON,Everlight and Freescale. Main products comprise IC,Modules,Potentiometer,IC Socket,Relay,Connector.Our parts cover such applications as commercial,industrial, and automotives areas.

We are looking forward to setting up business relationship with you and hope to provide you with the best service and solution. Let us make a better world for our industry!

Contact us

Tel: +86-755-8981 8866 Fax: +86-755-8427 6832
Email & Skype: info@chipsmall.com Web: www.chipsmall.com
Address: A1208, Overseas Decoration Building, #122 Zhenhua RD., Futian, Shenzhen, China

THIS DRAWING IS UNPUBLISHED. RELEASED FOR PUBLICATION -,- .
© COPYRIGHT - By - ALL RIGHTS RESERVED.

LOC	DIST
CM	53

REVISIONS

P	LTR	DESCRIPTION	DATE	DWN	APVD
	AG2	REVISED PER ECO-11-004587	11MAR11	RK	HMR

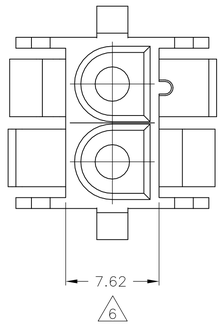

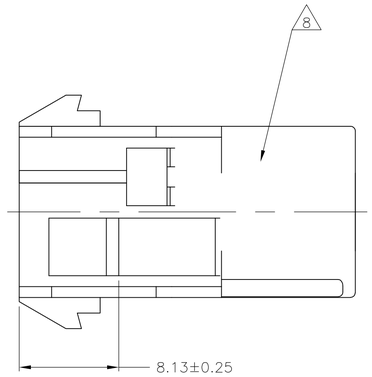

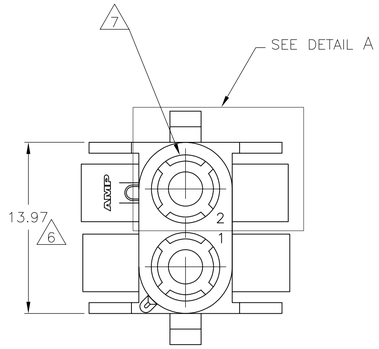

1. MATES WITH APPROPRIATE UNIVERSAL MATE-N-LOK™ PLUG.
2. RECOMMENDED PANEL THICKNESS 0.76 – 2.29.
3. PANEL MUST BE PUNCHED SO THAT THE HOUSING ENTERS THE PANEL IN THE SAME DIRECTION AS THE PUNCH.

4. OPTIONAL FOR KEYING HOUSING IN PANEL.

5. CIRCUIT NUMBER 1 LOCATION.

6. DIMENSION INDICATED IS AS MOLDED. ADDITIONAL GROWTH DUE TO SUBSEQUENT MOISTURE ABSORPTION MAY OCCUR.

7. FOUR RIBS EQUALLY SPACED, NO SPECIFIC ORIENTATION. NO RIBS OR SIX RIBS EQUALLY SPACED, NO SPECIFIC ORIENTATION, OPTIONAL.

8. UNDERWRITERS RECOGNIZED COMPONENT LOGO AND CSA CERTIFICATION LOGO TO BE LOCATED ONCE EACH ON SIDE OF HOUSING.

9. OBSOLETE PARTS: OBSOLETE CIS STREAMLINING PER D.RENAUD/D.SINISI

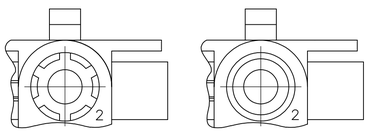

DETAIL A
OPTIONAL CONSTRUCTIONS

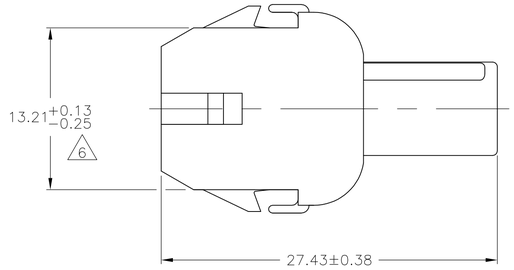

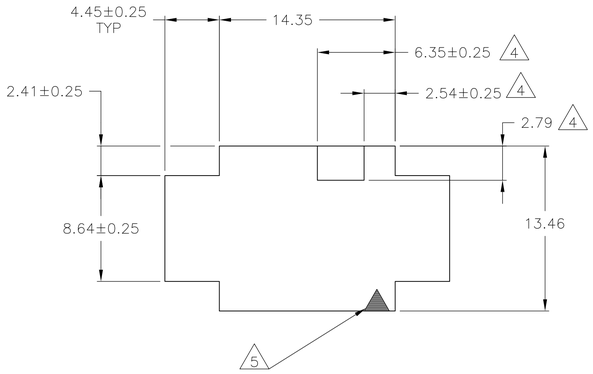

RECOMMENDED PANEL CUTOUT

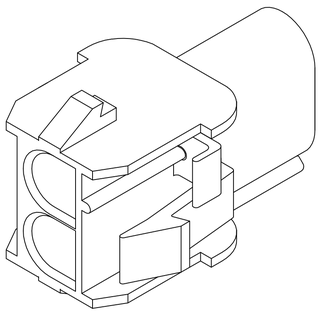

3-DIMENSIONAL MODEL
NTS

4.45	.175	27.43	1.080
2.79	.110	14.35	.565
2.54	.100	13.97	.550
2.41	.095	13.46	.530
2.29	.090	13.21	.520
0.76	.030	8.64	.340
0.38	.015	8.13	.320
0.25	.010	7.62	.300
0.13	.005	6.35	.250
MM	IN	MM	IN

CONVERSION TABLE

	COLOR	PART NO.
	BLACK	1-480699-9
	GREY	1-480699-8
	BLUE	1-480699-6
	GREEN	1-480699-5
9 SUPERSEDED BY 1-480699-0	~~YELLOW~~	~~1-480699-4~~
9 OBSOLETE	~~ORANGE~~	~~1-480699-3~~
	RED	1-480699-2
	BROWN	1-480699-1
	NATURAL	1-480699-0

THIS DRAWING IS A CONTROLLED DOCUMENT.

DIMENSIONS: mm

TOLERANCES UNLESS OTHERWISE SPECIFIED:
0 PLC ± –
1 PLC ± –
2 PLC ± 0.13
3 PLC ± –
4 PLC ± –
ANGLES ± 1° 0'

MATERIAL: NYLON,UL 94V-2
FINISH: –

METRIC

DWN K. WHITAKER 24JUL92
CHK R.SWING 24JUL92
APVD D. SELF 27JUL92
PRODUCT SPEC —
APPLICATION SPEC —
WEIGHT —

TE Connectivity

NAME: CAP,2 CIRCUIT, UNIVERSAL MATE-N-LOK (TM)

SIZE	CAGE CODE	DRAWING NO	RESTRICTED TO
A1	00779	C-480699	—

CUSTOMER DRAWING | SCALE 4:1 | SHEET 1 OF 1 | REV AG2

4805 (3/11)