Chipsmall Limited consists of a professional team with an average of over 10 year of expertise in the distribution of electronic components. Based in Hongkong, we have already established firm and mutual-benefit business relationships with customers from,Europe,America and south Asia,supplying obsolete and hard-to-find components to meet their specific needs.

With the principle of “Quality Parts,Customers Priority,Honest Operation,and Considerate Service”,our business mainly focus on the distribution of electronic components. Line cards we deal with include Microchip,ALPS,ROHM,Xilinx,Pulse,ON,Everlight and Freescale. Main products comprise IC,Modules,Potentiometer,IC Socket,Relay,Connector.Our parts cover such applications as commercial,industrial, and automotives areas.

We are looking forward to setting up business relationship with you and hope to provide you with the best service and solution. Let us make a better world for our industry!

Contact us

Tel: +86-755-8981 8866 Fax: +86-755-8427 6832
Email & Skype: info@chipsmall.com Web: www.chipsmall.com
Address: A1208, Overseas Decoration Building, #122 Zhenhua RD., Futian, Shenzhen, China

THIS DRAWING IS UNPUBLISHED. RELEASED FOR PUBLICATION -.- .
© COPYRIGHT - BY TYCO ELECTRONICS CORPORATION. ALL RIGHTS RESERVED.

LOC	DIST
AD	39

REVISIONS

P	LTR	DESCRIPTION	DATE	DWN	APVD
	L1	ECO-05-7481	14FEB06	MB	JO
	L2	REVISED PER ECO-09-020932	24AUG09	KK	AEG

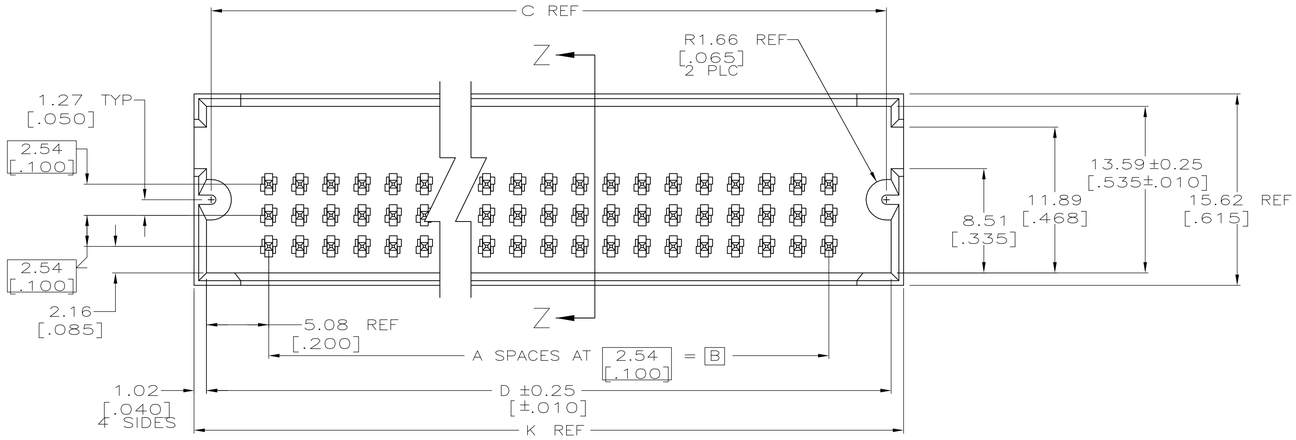

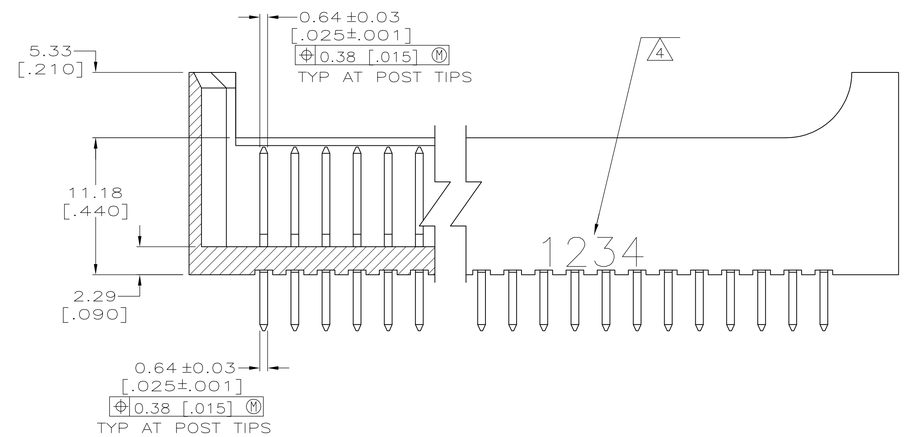

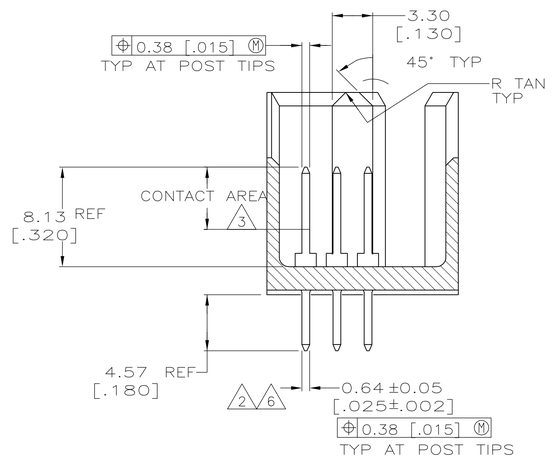

SECTION Z–Z
ROTATED 90° CW

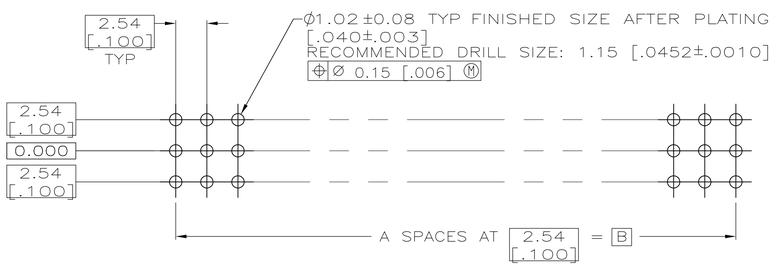

RECOMMENDED MOUNTING HOLE LAYOUT

1. HOUSING: GLASS FILLED NYLON; COLOR: BLACK.
   POST: COPPER ALLOY.
2. FINISH OVER INDICATED AREA:[.000100–.000200] BRIGHT TIN–LEAD OVER 0.00127 [.000050] NICKEL.
3. CONTACT AREA: 0.00076 [.000030] GOLD OVER 0.00127 [.000050] NICKEL.
4. RECESSED DATE CODE AND CSA LOGO
5. PRELIMINARY PART – NOT RELEASED FOR PRODUCTION
6. FINISH OVER INDICATED AREA:[.000100–.000200] MATTE TIN OVER 0.00127 [.000050] NICKEL.
7. ROHS 2002/95/EC COMPLIANT
8. OBSOLETE PARTS: OBSOLETE CIS STREAMLINING PER D.RENAUD/D.SINISI

OBSOLETE		47.75 [1.880]	45.72 [1.800]	44.96 [1.770]	35.56 [1.400]	14	45	7	6-103264-0
OBSOLETE		45.21 [1.780]	43.18 [1.700]	42.42 [1.670]	33.02 [1.300]	13	42	7	5-103264-9
OBSOLETE		50.29 [1.980]	48.26 [1.900]	47.50 [1.870]	38.10 [1.500]	15	48	7	5-103264-8
OBSOLETE		40.12 [1.580]	38.10 [1.500]	37.34 [1.470]	27.94 [1.100]	11	36	7	5-103264-7
OBSOLETE		174.75 [6.880]	172.72 [6.800]	171.96 [6.770]	162.56 [6.400]	64	195	7	5-103264-6
OBSOLETE	3 6	111.25 [4.380]	109.22 [4.300]	108.46 [4.270]	99.06 [3.900]	39	120	7	5-103264-5
OBSOLETE		187.45 [7.380]	185.42 [7.300]	184.66 [7.270]	175.26 [6.900]	69	210	7	5-103264-4
		136.65 [5.380]	134.62 [5.300]	133.86 [5.270]	124.46 [4.900]	49	150	7	5-103264-3
OBSOLETE		98.55 [3.880]	96.52 [3.800]	95.76 [3.770]	86.36 [3.400]	34	105	7	5-103264-2
OBSOLETE		70.61 [2.780]	68.58 [2.700]	67.82 [2.670]	58.42 [2.300]	23	72	7	5-103264-1
		47.75 [1.880]	45.72 [1.800]	44.96 [1.770]	35.56 [1.400]	14	45	5	1-103264-0
		45.21 [1.780]	43.18 [1.700]	42.42 [1.670]	33.02 [1.300]	13	42	5	103264-9
		50.29 [1.980]	48.26 [1.900]	47.50 [1.870]	38.10 [1.500]	15	48	5	103264-8
OBSOLETE		40.12 [1.580]	38.10 [1.500]	37.34 [1.470]	27.94 [1.100]	11	36		103264-7
OBSOLETE		174.75 [6.880]	172.72 [6.800]	171.96 [6.770]	162.56 [6.400]	64	195		103264-6
OBSOLETE	2 3	111.25 [4.380]	109.22 [4.300]	108.46 [4.270]	99.06 [3.900]	39	120		103264-5
8 OBSOLETE		187.45 [7.380]	185.42 [7.300]	184.66 [7.270]	175.26 [6.900]	69	210		103264-4
		136.65 [5.380]	134.62 [5.300]	133.86 [5.270]	124.46 [4.900]	49	150		103264-3
OBSOLETE		98.55 [3.880]	96.52 [3.800]	95.76 [3.770]	86.36 [3.400]	34	105		103264-2
		70.61 [2.780]	68.58 [2.700]	67.82 [2.670]	58.42 [2.300]	23	72		103264-1
	FINISH	E	D	C	B	A	NO OF POSN		PART NUMBER

THIS DRAWING IS A CONTROLLED DOCUMENT.

DIMENSIONS: INCHES

TOLERANCES UNLESS MARKED OTHERWISE SPECIFIED:
0 PLC ± –
1 PLC ± –
2 PLC ± 0.13 [.005]
3 PLC ± –
4 PLC ± –
ANGLES ± –

MATERIAL 1

FINISH SEE TABLE

DWN K.L.CLOUSER/UTA 2/6/91
CHK D SARVER 6/19/91
APVD –
PRODUCT SPEC –
APPLICATION SPEC –
WEIGHT –

Tyco Electronics
Tyco Electronics Corporation
Harrisburg, PA 17105-3608

NAME HEADER ASSY, MOD II, TRIPLE ROW, 2.54 X 2.54 [.100 X .100] 0.64 [.025] SQ SOLDER PIN

SIZE	CAGE CODE	DRAWING NO	RESTRICTED TO
A1	00779	C-103264	–

CUSTOMER DRAWING | SCALE 4:1 | SHEET 1 OF 1 | REV L2