Chipsmall Limited consists of a professional team with an average of over 10 year of expertise in the distribution of electronic components. Based in Hongkong, we have already established firm and mutual-benefit business relationships with customers from,Europe,America and south Asia,supplying obsolete and hard-to-find components to meet their specific needs.

With the principle of “Quality Parts,Customers Priority,Honest Operation,and Considerate Service”,our business mainly focus on the distribution of electronic components. Line cards we deal with include Microchip,ALPS,ROHM,Xilinx,Pulse,ON,Everlight and Freescale. Main products comprise IC,Modules,Potentiometer,IC Socket,Relay,Connector.Our parts cover such applications as commercial,industrial, and automotives areas.

We are looking forward to setting up business relationship with you and hope to provide you with the best service and solution. Let us make a better world for our industry!

Contact us

Tel: +86-755-8981 8866 Fax: +86-755-8427 6832
Email & Skype: info@chipsmall.com Web: www.chipsmall.com
Address: A1208, Overseas Decoration Building, #122 Zhenhua RD., Futian, Shenzhen, China

106110

ADAPTER P/N	ALIGNMENT SLEEVE MATERIAL	DUST CAP COLOR	PANEL NUT MATERIAL
106110-1000	CERAMIC	BLACK	METAL
106110-1020*			
106112-1000	PHOSPHOR BRONZE	RED	
106112-1100*			
106113-1000	PLASTIC		
106113-1020*			
106113-1100		BLACK	
106112-1010	PHOSPHOR BRONZE	RED	PLASTIC

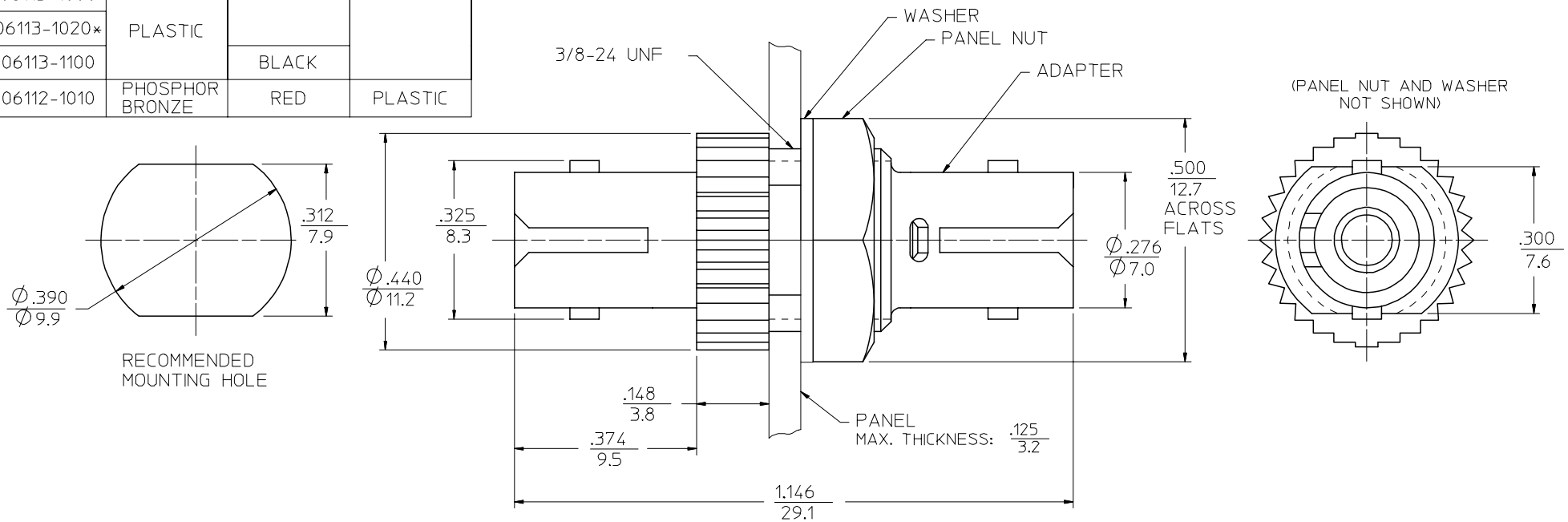

NOTES:

1. DUST CAPS ARE NOT SHOWN BUT INCLUDED.

*2. P/N 106113-1020, P/N 106110-1020 AND P/N 106112-1100 ARE BULK PACKED IN QUANTITY OF 100 PIECES.

ENTER DESCRIPTION
EC NO: MF2008-0168
DRWN: YBEDNYAK 2007/10/19
CH'KD: 2007/10/22
APPR: IGUMIN 2007/10/22
DESCRIPTION
REV

QUALITY SYMBOLS
▼=0
▽=0

GENERAL TOLERANCES (UNLESS SPECIFIED)

	mm	INCH
4 PLACES	± ---	± ---
3 PLACES	± ---	± ---
2 PLACES	± ---	± ---
1 PLACE	± ---	± ---
ANGULAR ±1/2°		

DRAFT WHERE APPLICABLE MUST REMAIN WITHIN DIMENSIONS

DIMENSION STYLE: IN/MM
SCALE: 5:1
DESIGN UNITS: INCH
THIRD ANGLE PROJECTION

DRAWN BY: RPACIFICI DATE: 2005/12/22
CHECKED BY DATE
APPROVED BY DATE

TITLE: ST TYPE ADAPTER (METAL BODY)

molex MOLEX INCORPORATED

MATERIAL NO.: SEE TABLE
DOCUMENT NO.: SD-10611X-1X00
SHEET NO.: 1 OF 01
SIZE: B

THIS DRAWING CONTAINS INFORMATION THAT IS PROPRIETARY TO MOLEX INCORPORATED AND SHOULD NOT BE USED WITHOUT WRITTEN PERMISSION

tb_frame_B_P_ME_T
Rev. D 2004/04/02